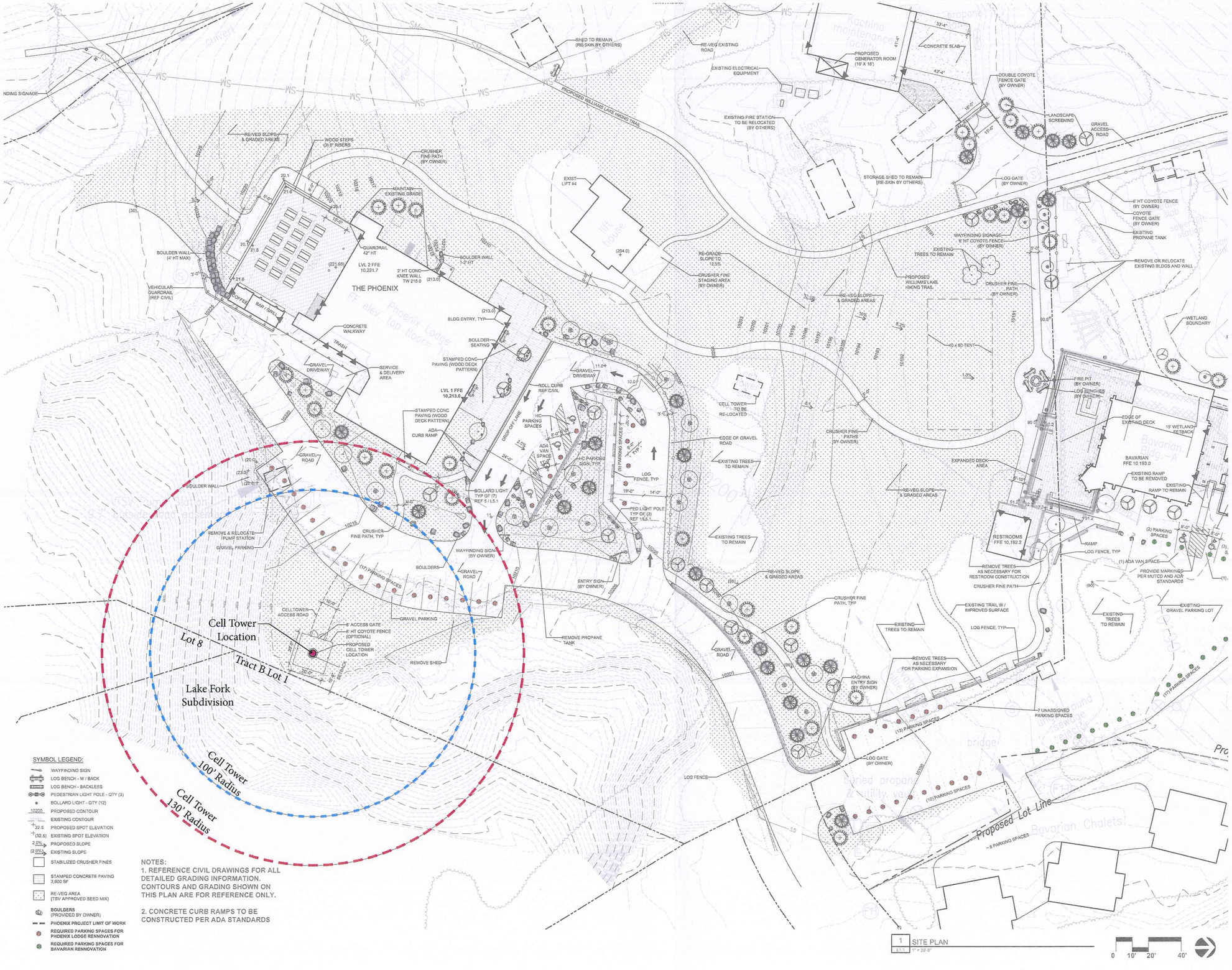

ZEHREN AND ASSOCIATES, INC.
ARCHITECTURE - PLANNING - INTERIORS
LANDSCAPE ARCHITECTURE
101 E Pueco
Santa Barbara, California 93101
(805) 963-6890 FAX (805) 963-8102

16 East Beaver Creek Blvd, Suite 303
P.O. Box 10075, Avon, Colorado 81620
(970) 949-0357 FAX (970) 949-1060

MECHANICAL NAME PHONE
ELECTRICAL NAME PHONE
CIVIL RUSSELL ENGINEERING PHONE
STRUCTURAL NAME PHONE

SEAL

PHOENIX LODGE RENOVATION

TAOS SKI VALLEY, NM

Copyright © 2018 by Zehren & Associates Inc.

ISSUED FOR:

No.	DATE	COMMENT
A	4/13/18	BUILDING PERMIT
B	5/8/18	AB #1
C	6/1/18	REVISION
D	10/2/18	REVISION

KEY PLAN

SITE PLAN

PROJECT No.	DATE
20162506	6/1/18
DRAWN BY JAG	CHK BY PC / TRV BY PC

SHEET No. L1.1

SCALE: AS SHOWN

SYMBOL LEGEND:

- WAYFINDING SIGN
- LOG BENCH - W / BACK
- LOG BENCH - BACKLESS
- PEDESTRIAN LIGHT POLE - QTY (3)
- BOLLARD LIGHT - QTY (12)
- 10200 PROPOSED CONTOUR
- EXISTING CONTOUR
- 32.5 PROPOSED SPOT ELEVATION
- (32.5) EXISTING SPOT ELEVATION
- 2.0% PROPOSED SLOPE
- (2.0%) EXISTING SLOPE
- STABILIZED CRUSHER FINES
- STAMPED CONCRETE PAVING 2,600 SF
- RE-VEG AREA (TSV APPROVED SEED MIX)
- BOULDERS (PROVIDED BY OWNER)

PLANT SCHEDULE

Trees

Symbol	Botanical	Common Name	QTY	Size	Spacing	Notes
	Acer glabrum	Rocky Mountain Maple	8	3" Cal.	as shown	Multi Stem B&B
	Abies lasiocarpa	Subalpine Fir	12	See Notes	as shown	(5) - 10' Ht. (3) -12' Ht. (3) -14' Ht.
	Pinus aristata	Bristlecone Pine	8	3" Cal.	as shown	B&B
	Populus tremuloides	Aspen	11	3" Cal.	as shown	Multi Stem B&B
	Populus tremuloides	Aspen	3	3" Cal.	as shown	Single Stem B&B

1 LANDSCAPE PLAN
L2.1 1" = 10'-0"

0 10' 20' 40'

ZEHREN AND ASSOCIATES, INC.
ARCHITECTURE - PLANNING - INTERIORS
LANDSCAPE ARCHITECTURE
#6 East Beaver Creek Blvd., Suite 303
P.O. Box 1370, Avon, Colorado 81620
(970) 949-0257 FAX (970) 949-1089
101 El Paseo
Santa Fe, New Mexico 87501
(505) 983-6499 FAX (505) 983-4102

CIVIL RUSSELL ENGINEERING PHONE
STRUCTURAL NAME PHONE
MECHANICAL NAME PHONE
ELECTRICAL NAME PHONE

SEAL

PHOENIX LODGE RENOVATION

TAOS SKI VALLEY, NM

Copyright © 2018 by Zehren & Associates Inc.

ISSUED FOR:

No.	DATE	COMMENT
A	4/11/18	BUILDING PERMIT
B	5/8/18	ASI #1
C	6/18/18	REVISION
D	10/2/18	REVISION

KEY PLAN

LANDSCAPE PLAN

PROJECT No.	DATE	
20162506	6/1/18	
DRAWN BY JAG	CHK BY PC	TRV BY PC

SHEET No. L2.1
SCALE: AS SHOWN

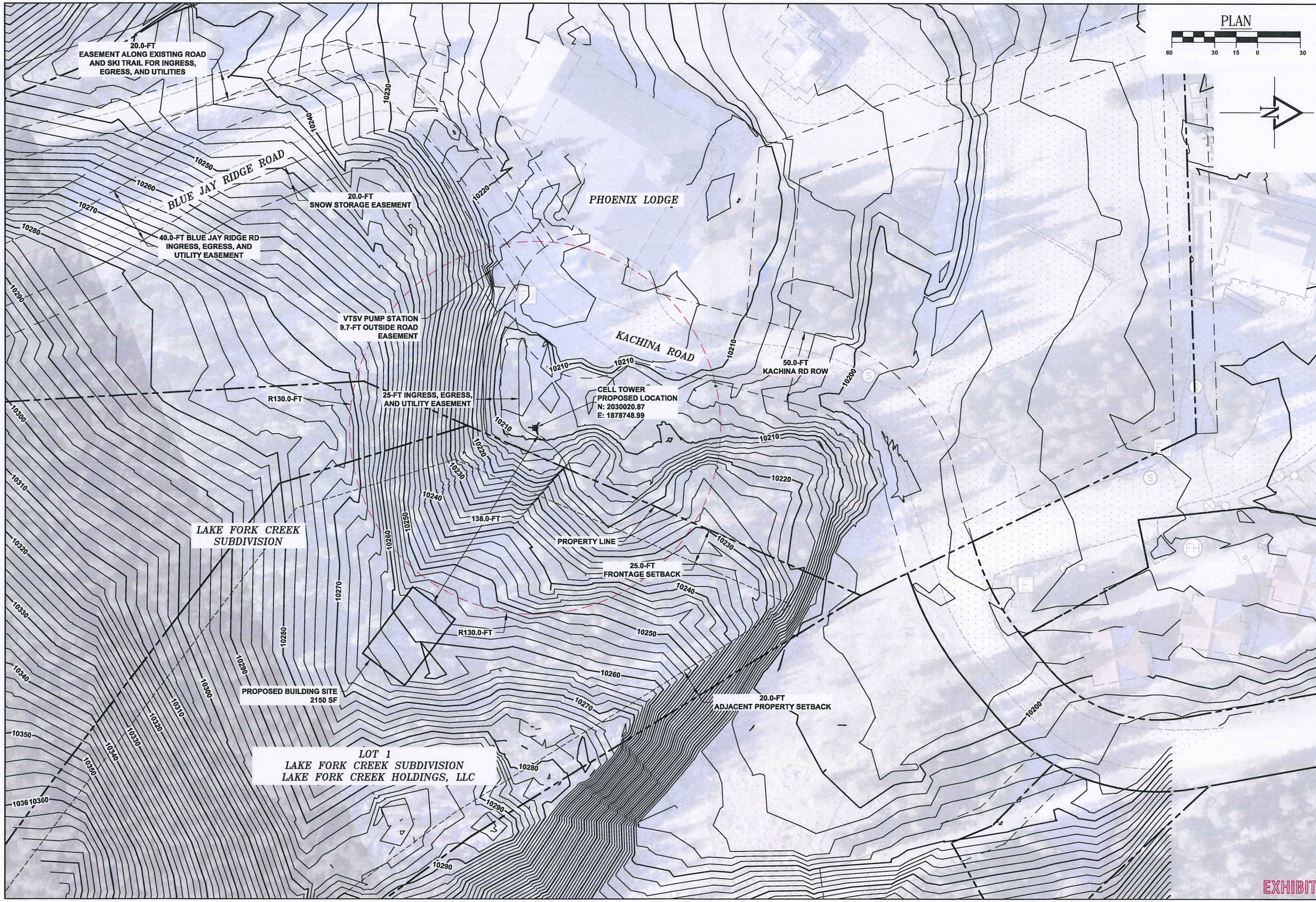

CALL 811
TWO WORKING DAYS
BEFORE YOU DIG

811 Know what's below. Call before you dig

REVISIONS:

TAOS SKI VALLEY
KACHINA VILLAGE
CELL TOWER SETBACK EXHIBIT

Russell Planning & Engineering, Inc.
Civil Engineering Services
934 Main Avenue, Unit C
Durango, Colorado 81301
Phone: (970) 385-4546
Fax: (970) 385-4502

Drawn:
Drafted:
Checked:

Date of Submittal
01/07/2019

1 OF 1

EXHIBIT

EX -CT

File Name: R:\Current Projects\Land Projects 3\TSV - Kachina Village\ACAD\Exhibits\CELL TOWER SETBACK EXHIBIT Plotted: 1/8/2019 10:45 AM Plot Style: HALF.STB Plotted By: JEREMY THOMPSON

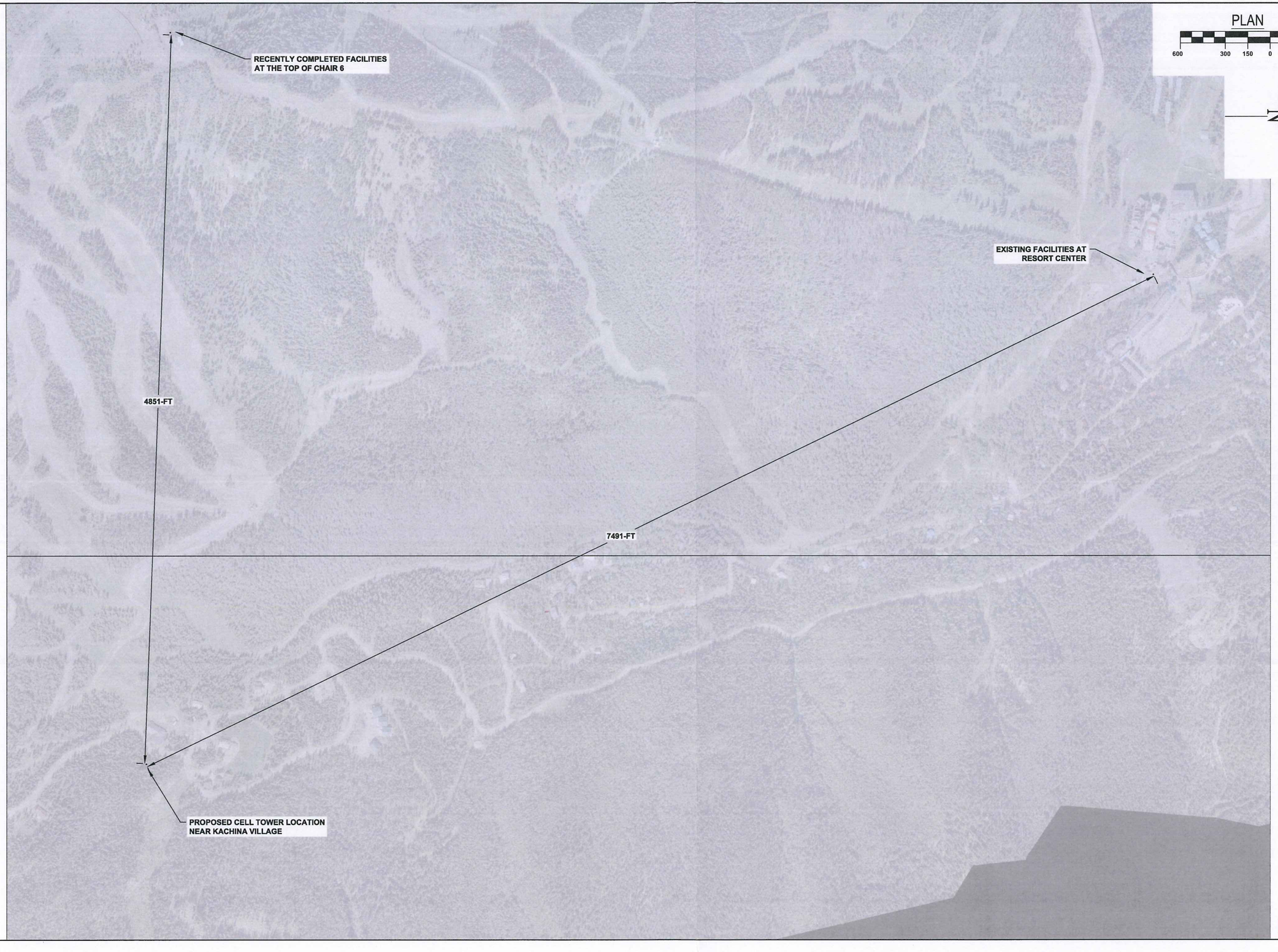

PLAN

600 300 150 0 300

N

CALL 811
TWO WORKING DAYS
BEFORE YOU DIG

811 Know what's below. Call before you dig.

REVISIONS:

TAOS SKI VALLEY
EXISTING FACILITIES
DISTANCE EXHIBIT

Russell Planning & Engineering, Inc.
Civil Engineering Services
934 Main Avenue, Unit C
Durango, Colorado 81301
Phone: (970) 385-4546
Fax: (970) 385-4502

Drawn: JT
Drafted: JT
Checked: DC

Date of Submittal
01/07/2019

1 OF 1

EXHIBIT

EX-FD

File Name: R:\Current Projects\Land Projects 3\TSV - Kachina Village\ACAD\Exhibits\DISTANCE TO EX FACILITIES EXHIBIT Plotted: 1/7/2019 2:04 PM Plot Style: HALF.STB Plotted By: JEREMY THOMPSON

TAPP

QUALITY STEEL POLES. DELIVERED.

ERECTION BOOK

TP ORDER: **16756**

CUSTOMER NAME: **CIC USA**

CUSTOMER P.O.: **TBD**

STRUCTURAL TYPE: **MONOPOLE**

SITE: **PHOENIX GRILL**

HEIGHT: **64 FT**

QTY. : **ONE (1)**

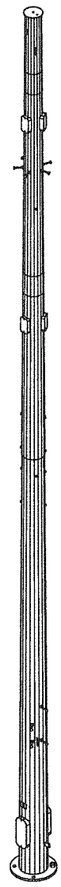

ISOMETRIC VIEW

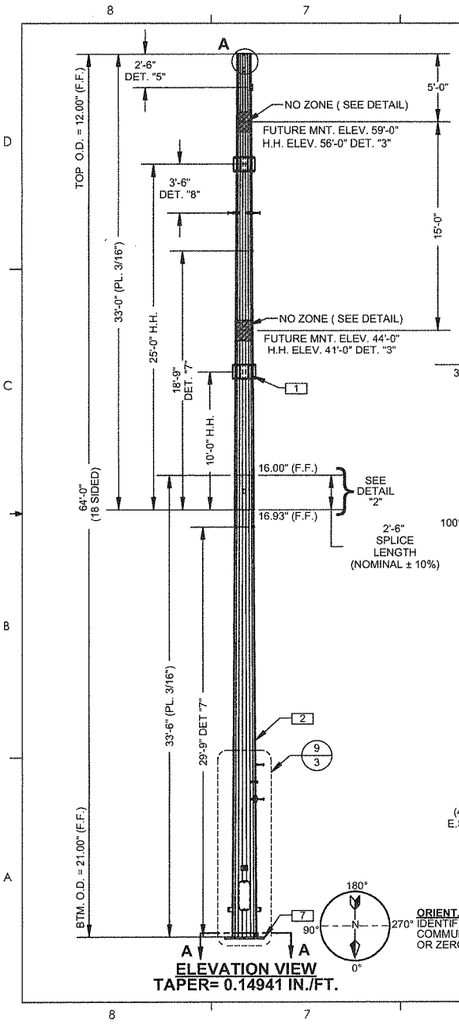

ELEVATION VIEW
TAPER= 0.14941 IN./FT.

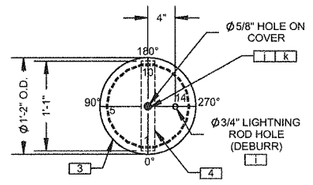

VIEW B-B
TOP COVER

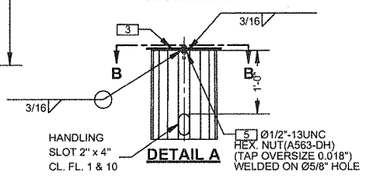

DETAIL A

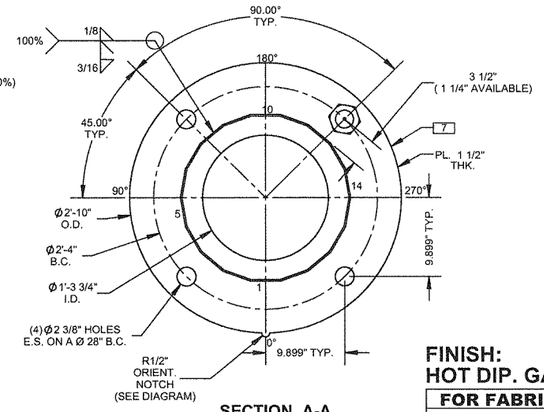

SECTION A-A
BASE PLATE

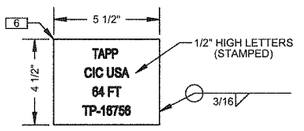

ID PLATE DETAIL (1/3)
ON CL. FL. 1

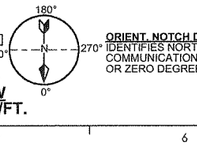

ORIENT. NOTCH DIAGRAM: IDENTIFIES NORTH TO COMMUNICATION SHELTER OR ZERO DEGREES.

BILL OF MATERIAL

ITEM#	QTY.	PART. No.	DESCRIPTION	MATERIAL	WT./Lb.	EXT. WT./Lb.
1	1	16756-12	TOP SECTION: PL. 3/16" x 12.00" x 16.93" x 33'-0"	ASTM A572-65	955	955
2	1	16756-22	BTM. SECTION: PL. 3/16" x 16.00" x 21.00" x 33'-6"	ASTM A572-65	1243	1243
3	1	16756-TC	TOP COVER; PL. 3/16" x 1'-2" O.D.	ASTM A36	8.14	8.14
4	1	16756-AP	ATTACH. PLATE; PL. 1/4" x 2" x 1'-1"	ASTM A36	1.82	1.82
5	1	00-AN	ATTACH. NUT; Ø1/2-13UNC HEX. NUT (BLACK)	ASTM A563-DH	0.0654	0.0654
6	1	16756-ID	ID PLATE; PL. 3/16" x 4 1/2" x 5 1/2"	ASTM A36	1.29	1.29
7	1	16756-BP	BASE PLATE: PL. 1 1/2" x 2'-10" O.D.	ASTM A572-60	295.98	295.98
8	6	00-HHF	HAND HOLE FRAME: 1/2" x 6" x 1'-0" I.D.	ASTM A572-65	17.79	106.74
9	12	00-JH	J-HOOK: ROD 3/8" x 3 3/4" LG.	ASTM A36	0.2	2.4
10	2	00-EPF	EXIT PORT FRAME: 3/4" x 9" x 2'-0" I.D.	ASTM A572-65	60.50	121
11	2	00-SC	SAFETY CLIMB: PL. 1/4" x 2 3/8" x 6"	ASTM A36	0.93	1.86
12	2	00-GP	GROUND PLATE: PL. 1/4" x 3 1/2" x 4"	ASTM A36	0.96	1.92
13	64	00-SBC	STEP BOLT CLIP: (SEE STD. DWG. 00-SBC)	ASTM A36	0.5	32
14	2	16756-CGN	CABLE GUIDE NUT; Ø5/8"-11UNC HVY. HEX. NUT(BLACK)	ASTM A563-DH	0.07	0.14
JN	8	00-JN	JACKING NUT, Ø1"-8UNC HVY. HEX. NUT (BLACK)	ASTM A563-DH	0.425	3.4
					BLACK WT.	2774.76
					GALV. WT.	2941.25

HARDWARE BILL OF MATERIAL

ITEM#	QTY.	PART. No.	DESCRIPTION	MATERIAL	WT./Lb.	EXT. WT./Lb.
a	6	00-HHC	HAND HOLE COVER: 3/16" x 7" x 1'-1" (GALV.)	ASTM A36	4.99	29.94
b	2	00-EPC	EXIT PORT COVER: 3/16" x 10 1/2" x 2'-1 1/2" (GALV.)	ASTM A36	14.38	28.76
c	16	00-JB	Ø1/4"-20UNC J-BOLT; (SEE STD. DWG. 00-JB2)(GALV.)	ASTM A36	0.112	1.792
d	16	00-HN	Ø1/4"-20UNC HEX NUT (GALV.)	ASTM A563-A	0	0
e	16	00-FW	Ø1/4" FLAT WASHER (GALV.)	ASTM F436-1	0	0
f	64	00-SB	STEP BOLT: 5/8" x 7" LG. (GALV.)	ASTM A394-1	1	64
g	128	00-SBN	STEP BOLT NUT: 5/8" HVY. HEX NUT A563-DH(GALV.)	ASTM A563-DH	0.07	8.96
h	1	SC-01	SAFETY CLIMB KIT	-	0	0
i	1	LR-01	LIGHTNING ROD KIT	-	0	0
j	1	00-HB	Ø1/2"-13UNC x 2" LG. HEX. BOLT FULL THREAD(GALV.)	ASTM A307	0.131	0.131
k	2	00-SLW	Ø1/2" SPRING LOCK WASHER (GALV.)	ASME B18.21.1	0.0141	0.0282
					HARDWARE WT.	133.61
					TOTAL WT. (HARDWARE WT. + GALV. WT.)	3074.86

QTY. SHOWN IS FOR ONE (1) STR.
TOTAL OF ONE (1) STR. REQUIRED

BASE PLATE WELD CHART	
POLE WALL THICKNESS	INTERIOR WELDING
3/16"	1/8"
7/32"	3/16"
1/4"	
5/16"	1/4"
3/8"	
7/16"	
1/2"	
9/16"	
5/8"	
11/16"	
3/4"	
7/8"	

SHOP NOTES:

1. ALL GALV. NUTS TO BE TAPPED 0.02 IN. OVERSIZE
2. ALL HOLES TO BE DEBURRED UNLESS NOTED OTHERWISE
3. GRIND SMOOTH ALL SHARP EDGES.

REV	DATE:	REV. BY	CHK. BY	DESCRIPTION
0	08/24/18	-	YATV	ISSUED FOR FABRICATION

FINISH:
HOT DIP. GALV.

TAPP
QUALITY STEEL POLES. DELIVERED.

FOR FABRICATION

THIS DRAWING MAY CONTAIN PROPRIETARY AND CONFIDENTIAL MATERIAL. UNAUTHORIZED DUPLICATION OR DISSEMINATION OF THIS DOCUMENT OR THE INFORMATION IT CONTAINS IS PROHIBITED.

PROPERTY OF TAPP, INC.
2427 KELLY LANE
HOUSTON, TEXAS, 77063 U.S.A.
PHONE 281-444-6277 FAX 281-444-7270

R.DB.10-3

DWN	DATE	CIC USA
FCRC	08/24/18	
CHK	DATE	TELECOMMUNICATION STRUCTURE
APP	DATE	ASSEMBLY AND GENERAL DETAILS PHOENIX GRILL

CUSTOMER DRAWING REFERENCE	CUST. P.O. NUMBER	TAPP ORDER No.	DRAWING No.	SH/OF	SCALE	REV.
N/A	TBD	TP-16756	16756-PA	2/5	NTS	0

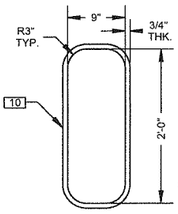

EXIT PORT

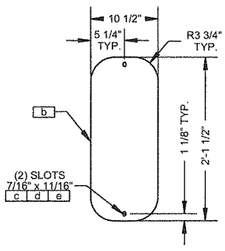

EXIT PORT COVER

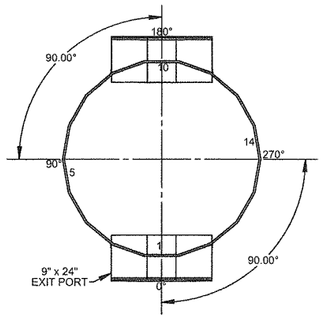

E.P. ORIENTATION (4/-)

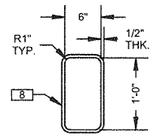

HAND HOLE

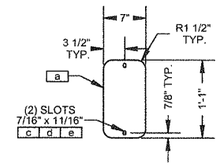

HAND HOLE COVER

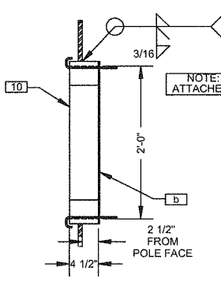

SIDE VIEW
9" x 24" EXIT PORT DETAIL
@ 3'-0" ELEVATION

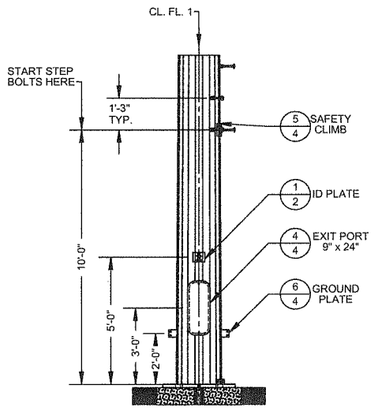

BOTTOM DETAIL (9/2)

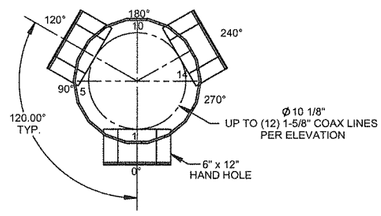

H.H. ORIENTATION (3/2)

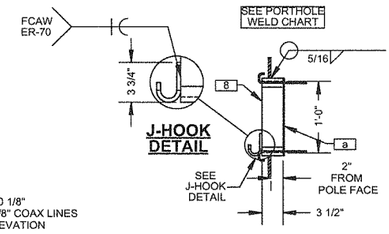

SIDE VIEW
6" x 12" HAND HOLE DETAIL
@ 56'-0" ELEVATION
@ 41'-0" ELEVATION

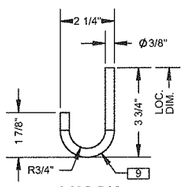

J-HOOK

PORTHOLE WELD CHART

POLE WALL THICKNESS	A	B	C	TYPE
3/16"	5/16"	-	-	FILLET
1/4"	3/8"	-	-	
5/16"	1/2"	-	-	
3/8"	9/16"	-	-	
7/16"	5/16	5/16"	45	PJP
1/2"	3/8"	3/8"		
9/16"		7/16"		
5/8"		1/2"		

FINISH:
HOT DIP. GALV.

FOR FABRICATION

THIS DRAWING MAY CONTAIN PROPRIETARY AND CONFIDENTIAL MATERIAL. UNAUTHORIZED DUPLICATION OR DISSEMINATION OF THIS DOCUMENT OR THE INFORMATION IT CONTAINS IS PROHIBITED.

PROPERTY OF TAPP, INC.
2407 KELLY LANE
HOUSTON, TEXAS 77043 U.S.A.
PHONE 281-464-8277 FAX 281-464-7270

R.DB.10-3

REV.	DATE:	REV. BY	CHK. BY	DESCRIPTION
0	08/24/18	-	YATV	ISSUED FOR FABRICATION

TAPP
QUALITY STEEL POLES. DELIVERED.

DWN FCRC	DATE 08/24/18	CIC USA
CHK	DATE	TELECOMMUNICATION STRUCTURE
APP	DATE	ASSEMBLY AND GENERAL DETAILS PHOENIX GRILL

CUSTOMER DRAWING REFERENCE	CUST. P.O. NUMBER	TAPP ORDER No.	DRAWING No.	SH/OF	SCALE	REV.
N/A	TBD	TP-16756	16756-PA	3/5	NTS	0

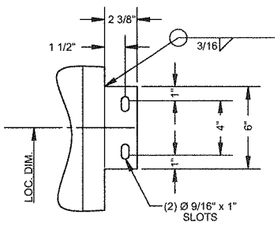

SAFETY CLIMB BRACKET DETAIL (5/3) 11
ON CL. FL. 16

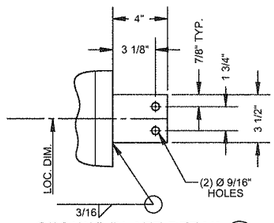

GROUND PLATE DETAIL (6/3) 12
ON CL. FL. 5 & 14

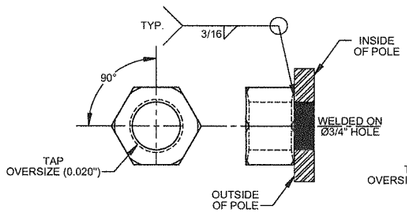

CABLE GUIDE NUT DETAIL (7/2) 14
ON CL. FL. 16

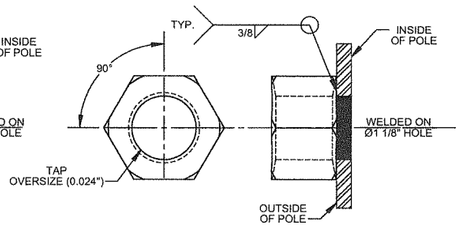

JACKING NUT DETAIL (JN/DTL) JN
ON CL. FL. 4 & 13

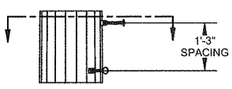

1. 1. STEP BOLT FULL HEIGHT (13/f/g) FROM 10'-0" ABOVE BASE PLATE (15" ALT. VERTICAL SPACING)
2. DOUBLE LUG AT TOP/BTM OF EACH SECTION
3. SHOP SHALL ALIGN SAFETY CLIMB PLATE @ CL. OF STEP BOLTS
4. STOP STEP CLIPS AT THE SAME LEVEL THE SAFETY CLIMB BRACKET

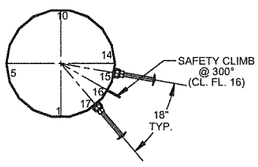

STEP BOLT DETAIL

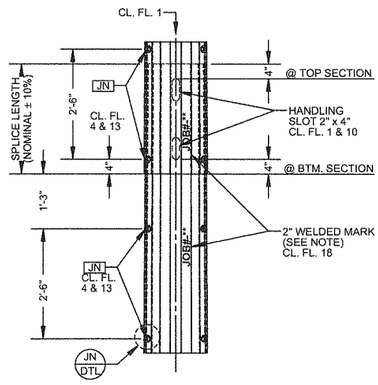

SPLICE DETAIL (2/2)

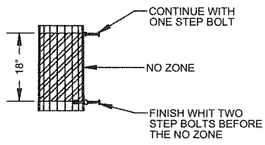

NO ZONE DETAIL

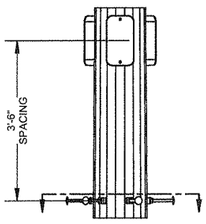

DETAIL (8/2) 13 f g

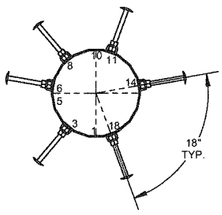

FINISH:
HOT DIP. GALV.

REV.	DATE:	REV. BY	CHK. BY	DESCRIPTION
0	08/24/18	-	YATV	ISSUED FOR FABRICATION

TAPP
QUALITY STEEL POLES. DELIVERED.

FOR FABRICATION

THIS DRAWING MAY CONTAIN PROPRIETARY AND CONFIDENTIAL MATERIAL. UNAUTHORIZED DUPLICATION OR DISSEMINATION OF THIS DOCUMENT OR THE INFORMATION IT CONTAINS IS PROHIBITED.

PROPERTY OF TAPP, INC.
2427 KELLY LANE
HOUSTON, TEXAS, 77088 U.S.A.
PHONE 281-444-6277 FAX 281-444-7270

R.DB.10-3

DWN	FCRC	DATE 08/24/18
CHK		DATE
APP		DATE

CIC USA

TELECOMMUNICATION STRUCTURE

ASSEMBLY AND GENERAL DETAILS
PHOENIX GRILL

CUSTOMER DRAWING REFERENCE	CUST. P.O. NUMBER	TAPP ORDER No.	DRAWING No.	SH/OF	SCALE	REV.
N/A	TBD	TP-16756	16756-PA	4/5	NTS	0

16756 - **
JOB# SECTION # (SEE NOTE)

NOTE:
TOP SECTION = 12
BTM. SECTION = 22

2" ID WELD MARK DETAIL

CHECKLIST

BILL OF MATERIAL

ITEM#	QTY.	PART. No.	DESCRIPTION	MATERIAL	WT./Lb.	EXT. WT./Lb.	CHECK	O.D. DIMENSIONS
1	1	16756-12	TOP SECTION: PL. 3/16" x 12.00" x 16.93" x 33'-0"	ASTM A572-65	955	955		
2	1	16756-22	BTM. SECTION: PL. 3/16" x 16.00" x 21.00" x 33'-6"	ASTM A572-65	1243	1243		
3	1	16756-TC	TOP COVER; PL. 3/16" x 1'-2" O.D.	ASTM A36	8.14	8.14		
4	1	16756-AP	ATTACH. PLATE; PL. 1/4" x 2" x 1'-1"	ASTM A36	1.82	1.82		
5	1	00-AN	ATTACH. NUT; Ø1/2-13UNC HEX. NUT (BLACK)	ASTM A563-DH	0.0654	0.0654		
6	1	16756-ID	ID PLATE: PL. 3/16" x 4 1/2" x 5 1/2"	ASTM A36	1.29	1.29		
7	1	16756-BP	BASE PLATE: PL. 1 1/2" x 2'-10" O.D.	ASTM A572-60	295.98	295.98		
8	6	00-HHF	HAND HOLE FRAME: 1/2" x 6" x 1'-0" I.D.	ASTM A572-65	17.79	106.74		
9	12	00-JH	J-HOOK: ROD 3/8" x 3 3/4" LG.	ASTM A36	0.2	2.4		
10	2	00-EPF	EXIT PORT FRAME: 3/4" x 9" x 2'-0" I.D.	ASTM A572-65	60.50	121		
11	2	00-SC	SAFETY CLIMB: PL. 1/4" x 2 3/8" x 6"	ASTM A36	0.93	1.86		
12	2	00-GP	GROUND PLATE: PL. 1/4" x 3 1/2" x 4"	ASTM A36	0.96	1.92		
13	64	00-SBC	STEP BOLT CLIP: (SEE STD. DWG. 00-SBC)	ASTM A36	0.5	32		
14	2	16756-CGN	CABLE GUIDE NUT; Ø5/8"-11UNC HVY. HEX. NUT(BLACK)	ASTM A563-DH	0.07	0.14		
JN	8	00-JN	JACKING NUT, Ø1"-8UNC HVY. HEX. NUT (BLACK)	ASTM A563-DH	0.425	3.4		
					BLACK WT.	2774.76		
					GALV. WT.	2941.25		

TOE CRACKS:

NOTES:

FINISH:
HOT DIP. GALV.

FOR FABRICATION

THIS DRAWING MAY CONTAIN PROPRIETARY AND CONFIDENTIAL INFORMATION. UNAUTHORIZED DUPLICATION OR DISSEMINATION OF THIS DOCUMENT OR THE INFORMATION IT CONTAINS IS PROHIBITED.

PROPERTY OF TAPP, INC.
2427 KELLY LANE
HOUSTON, TEXAS, 77008 U.S.A.
PHONE 281-444-8277 FAX 281-444-7270

REV.	DATE:	REV. BY	CHK. BY	DESCRIPTION
0	08/24/18	-	YATV	ISSUED FOR FABRICATION

TAPP
QUALITY STEEL POLES. DELIVERED.

DWN	DATE	**CIC USA**
FCRC	08/24/18	
CHK	DATE	TELECOMMUNICATION STRUCTURE
APP	DATE	ASSEMBLY AND GENERAL DETAILS PHOENIX GRILL

CUSTOMER DRAWING REFERENCE	CUST. P.O. NUMBER	TAPP ORDER No.	DRAWING No.	SH/OF	SCALE	REV.
R.DB.10-3						
N/A	TBD	TP-16756	16756-PA	5/5	NTS	0

TransAmerican
Power Products, Inc.
2427 Kelly Lane
Houston, Texas 77066

SLIP JOINT ASSEMBLY

THIS STANDARD DEFINES THE STANDARD PROCEDURE FOR JACKING SLIP–FIT POLES TOGETHER.

1. POLE ASSEMBLY SHOULD BE DONE ON THE GROUND. ASSEMBLY OF THE POLE IN THE AIR, IN A VERTICAL FASHION, IS NOT RECOMMENDED.

2. ALIGN THE SECTIONS PROPERLY. THERE IS A 2" LONG WELD ON THE MATCHING CORNERS OF EACH SECTION. LINE THEM UP FOR PROPER SECTION ALIGNMENT.

3. THERE ARE TWO SETS OF JACKING NUTS (TWO IN EACH SET) WELDED TO EACH SECTION. SLIP THE SECTIONS TOGETHER SO THE JACKING NUTS RUN ALONG THE POLE IN–LINE AND HORIZONTALLY THIS WILL PROVIDE ADEQUATE SPACE FOR THE JACKING EQUIPMENT AND IT WILL ENSURE PROPER ALIGNED.

4. THERE ARE SEVERAL ACCEPTABLE TYPES OF EQUIPMENT FOR PULLING THE SECTIONS TOGETHER: HYDRAULIC JACKS, CHAIN HOIST OR TURNBUCKLES. REGARDLESS OF THE EQUIPMENT USED, HOWEVER, JACKING PLATES MUST BE USED. FOUR JACKING PLATES ARE REQUIRED (ONE PLATE PER SECTION). THE JACKING PLATE SHOULD BE BOLTED TO BOTH JACKING NUTS AND THE LOAD SHOULD BE APPLIED TO THE JACKING PLATES. THE GOAL IS TO INSURE THAT THE BOTH JACKING NUTS ON EACH SECTION CARRY THE JACKING LOAD.

5. EACH SECTION SHOULD BE BLOCKED UP OFF THE GROUND. LUBRICATION SHOULD BE APPLIED TO THE MALE SECTION TO AID IN SLIPPING PROCESS. LIQUID DISH WASHING DETERGENT IS PREFERRED. DO NOT USE OIL BASED LUBRICANTS. THEY WILL BE DIFFICULT, IF NOT IMPOSSIBLE, TO REMOVE.

6. THE JACKING DEVICES SHOULD BE ATTACHED AFTER THE SECTIONS HAVE BEEN BROUGHT TOGETHER AS FAR AS POSSIBLE. THE MINIMUM AND MAXIMUM JACKING FORCES APPEAR IN THE ATTACHED TABLE. DURING THE JACKING PROCESS THE SECTIONS SHOULD BE WORKED UP AND DOWN TO HELP "WALK" THE FEMALE SECTION ON TO THE MALE SECTION.

NOTE:

IF THE MINIMUM SPLICE LENGTH CANNOT BE ACHIEVED, OR IF THERE ARE VISIBLE GASP (IN EXCESS OF 3/16" ON OPPOSITE FLATS) AFTER THE SECTIONS PASS MAXIMUM SLIP – TRANSAMERICAN POWER SHOULD BE CONTACTED BEFORE PROCEEDING WITH THE ERECTION. UNDER NO CIRCUMSTANCE SHOULD THE STRUCTURE BE ERECTED OR LOADED IF THESE CONDITIONS EXIST.

RECOMMENDED JACKING FORCES

MINIMUM PLATE THICKNESS (INCHES)	MINIMUM JACKING FORCE PER SIDE (POUNDS)	MAXIMUM JACKING FORCE PER SIDE (POUNDS)
3/16	19,000	25,800
1/4	26,800	32,700
5/16	34,700	42,000
3/8	42,500	47,500
7/16 and Above	48,000	52,000

FOR FABRICATION

THIS DRAWING MAY CONTAIN PROPRIETARY AND CONFIDENTIAL MATERIAL. UNAUTHORIZED DUPLICATION OR DISSEMINATION OF THIS DOCUMENT OR THE INFORMATION IT CONTAINS IS PROHIBITED.

PROPERTY OF TAPP, INC.
2427 KELLY LANE
HOUSTON, TEXAS 77066 U.S.A.
PHONE 281-444-5277 FAX 281-444-7270

TransAmerican
Power Products, Inc.
2427 Kelly Lane
Houston, Texas 77066

DWN	DATE	TAPP STANDARD
SW	12/22/04	
CHK	DATE	TELECOMMUNICATION STRUCTURE
APP	DATE	LIGHTNING ROD INSTALLATION

CUST. P.O. NUMBER	TAPP ORDER No.	DRAWING No.	SH/OF	SCALE	REV.
N/A	STANDARD	COVER	1/1	NTS	0

BILL OF MATERIAL

Item#	Qty.	Part No.	Description	Wt./ea.	Total Wt.
1	2	--	COPPER CLAD GROUND ROD, ø5/8" x 8'-0"	-	-
2	1	--	#2 TINNED COPPER WIRE x 30'-0"	-	-
			BLACK WT.	-	
			GALV. WT.	-	

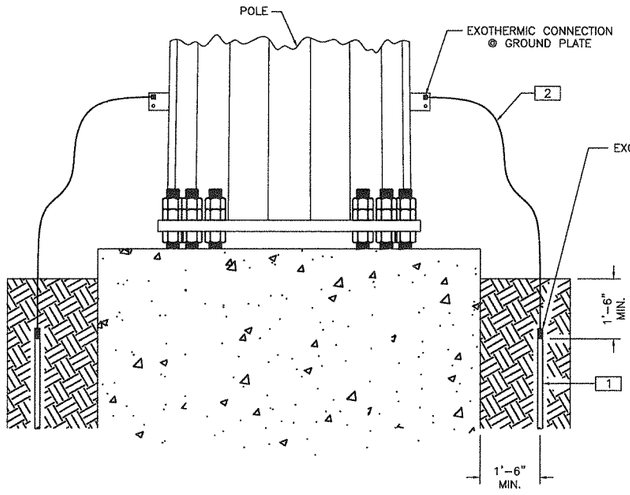

ELEVATION VIEW

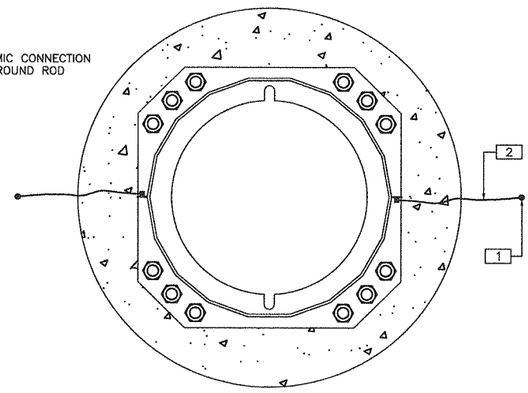

PLAN VIEW

FIELD NOTES:
1. DRAWING IS AN ILLUSTRATION ONLY. ADJUSTMENTS MAY NEED TO BE MADE IN THE FIELD.
2. #2 TINNED COPPER WIRE MUST BE RUN WITHOUT ANY SHARP BENDS AND PLACED IN A MANNER CONSISTANT WITH INDUSTRY STANDARDS.
3. ALL GROUND RODS SHALL BE LOCATED AS SPECIFIED BY DRAWING.
4. ALL EXOTHERMIC CONNECTIONS SHALL BE SUPPLIED BY OTHER, I.E.; FIELD CREW, ELECTRICIAN, ETC.
5. GROUNDING MUST BE INSTALLED IN ACCORDANCE WITH EIA STANDARDS AND MUST MEET CUSTOMERS APPROVAL.

THIS DRAWING MAY CONTAIN PROPRIETARY AND CONFIDENTIAL MATERIAL. UNAUTHORIZED DUPLICATION OR DISSEMINATION OF THIS DOCUMENT OR THE INFORMATION IT CONTAINS IS PROHIBITED.

PROPERTY OF TAPP, INC.
2427 KELLY LANE
HOUSTON, TEXAS 77066 U.S.A.
PHONE 281-444-8277 FAX 281-444-7270

TransAmerican
Power Products, Inc.
2427 Kelly Lane
Houston, Texas 77066

DWN	DATE	
BH	06/06/03	TAPP STANDARD
CHK	DATE	TELECOMMUNICATION STRUCTURE
APP	DATE	GROUNDING INSTALLATION

CUST. P.O. NUMBER	TAPP ORDER No.	DRAWING No.	SH/OF	SCALE	REV.
N/A	STANDARD	GR-02	1 OF 1	NTS	0

BILL OF MATERIAL

Item#	Qty.	Part No.	Description	Wt./ea.	Total Wt.
1	1	--	ø5/8" x 8'-0" COPPER CLAD LIGHTNING ROD	-	-
2	2	--	ø5/8" HEX NUT (A563-C) (GALV.)	-	-
3	2	--	ø5/8" FLAT WASHER (B18.22.1) (GALV.)	-	-
4	1	--	ø5/8" SPRING LOCK WASHER (B18.21.1) (GALV.)	-	-
			BLACK WT.		-
			GALV. WT.		-

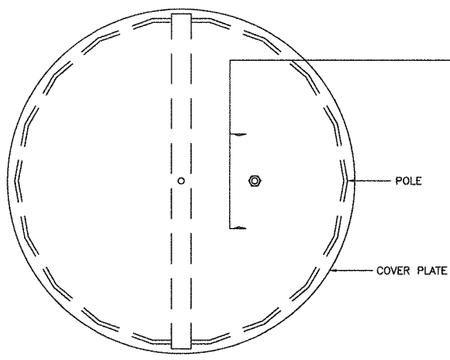

PLAN VIEW

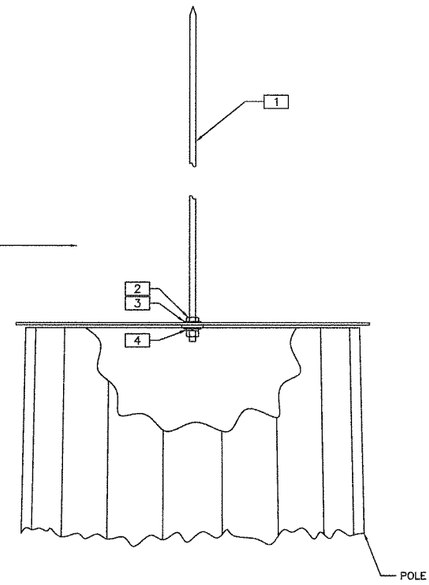

ELEVATION VIEW

THIS DRAWING MAY CONTAIN PROPRIETARY AND CONFIDENTIAL MATERIAL. UNAUTHORIZED DUPLICATION OR DISSEMINATION OF THIS DOCUMENT OR THE INFORMATION IT CONTAINS IS PROHIBITED.

PROPERTY OF TAPP, INC.
2427 KELLY LANE
HOUSTON, TEXAS. 77066 U.S.A.
PHONE 281-444-8277 FAX 281-444-7270

TransAmerican
Power Products, Inc.
2427 Kelly Lane
Houston, Texas 77066

DWN	DATE	TAPP STANDARD
MM	05/26/04	
CHK	DATE	TELECOMMUNICATION STRUCTURE
APP	DATE	LIGHTNING ROD INSTALLATION

CUST. P.O. NUMBER	TAPP ORDER No.	DRAWING No.	SH/OF	SCALE	REV.
N/A	STANDARD	LR-02	1 OF 1	NTS	0

BILL OF MATERIAL

Item#	Qty.	Part No.	Description	Wt./ea.	Total Wt.
1	1	--	SAFETY CLIMB	-	-
			BLACK WT.		-
			GALV. WT.		-

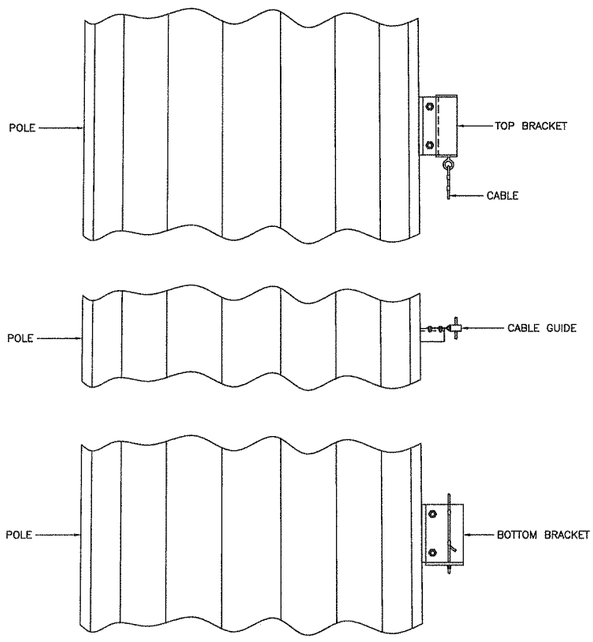

ELEVATION VIEW

FIELD NOTES:
1. DRAWING IS AN ILLUSTRATION ONLY. ADJUSTMENTS MAY NEED TO BE MADE IN THE FIELD.
2. SEE MANUFACTURERS INSTRUCTIONS PRIOR TO ASSEMBLY OF SAFETY CLIMB.

THIS DRAWING MAY CONTAIN PROPRIETARY AND CONFIDENTIAL MATERIAL. UNAUTHORIZED DUPLICATION OR DISSEMINATION OF THIS DOCUMENT OR THE INFORMATION IT CONTAINS IS PROHIBITED.

PROPERTY OF TAPP, INC.
2427 KELLY LANE
HOUSTON, TEXAS, 77066 U.S.A.
PHONE 281-444-8277 FAX 281-444-7270

TransAmerican
Power Products, Inc.
2427 Kelly Lane
Houston, Texas 77066

DWN	DATE	
BH	06/06/03	TAPP STANDARD
CHK	DATE	TELECOMMUNICATION STRUCTURE
APP	DATE	SAFETY CLIMB INSTALLATION

CUST. P.O. NUMBER	TAPP ORDER No.	DRAWING No.	SH/OF	SCALE	REV.
N/A	STANDARD	SC-01	1 OF 1	NTS	0

BILL OF MATERIAL

Item#	Qty.	Part No.	Description	Wt./ea.	Total Wt.
1	2	--	STEP BOLT; ø5/8" x 0'-7" W/ (2) HVY. HEX NUTS	-	-
			BLACK WT.		-
			GALV. WT.		-

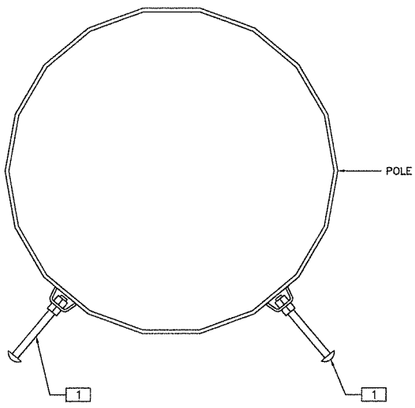

PLAN VIEW

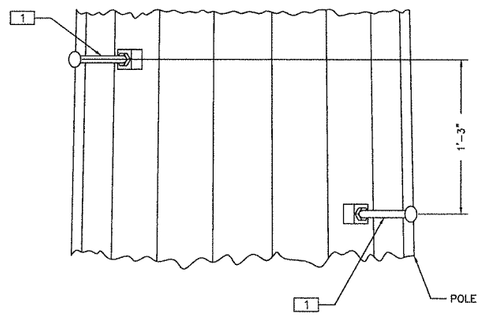

ELEVATION VIEW

NOTE:
1. STEP BOLTS START 10'-0" ABOVE BASEPLATE.
2. STEP BOLTS FULL HEIGHT OF POLE TO WITHIN 4'-0" OF POLE TOP.

THIS DRAWING MAY CONTAIN PROPRIETARY AND CONFIDENTIAL MATERIAL. UNAUTHORIZED DUPLICATION OR DISSEMINATION OF THIS DOCUMENT OR THE INFORMATION IT CONTAINS IS PROHIBITED.

PROPERTY OF TAPP, INC.
2427 KELLY LANE
HOUSTON, TEXAS. 77066 U.S.A.
PHONE 281-444-9277 FAX 281-444-7270

TransAmerican
Power Products, Inc.
2427 Kelly Lane
Houston, Texas 77066

DWN	DATE	TAPP STANDARD
BH	11/11/03	
CHK	DATE	TELECOMMUNICATION STRUCTURE
APP	DATE	STEP BOLT INSTALLATION

CUST. P.O. NUMBER	TAPP ORDER No.	DRAWING No.	SH/OF	SCALE	REV.
N/A	STANDARD	SB-02	1 OF 1	NTS	0

BILL OF MATERIAL

Item#	Qty.	Part No.	Description	Wt./ea.	Total Wt.
1	1	--	HAND HOLE COVER	-	-
2	2	--	J-BOLT; 3/8" x 6 1/2" x 1 1/2" x 4"	-	-
			BLACK WT.		-
			GALV. WT.		-

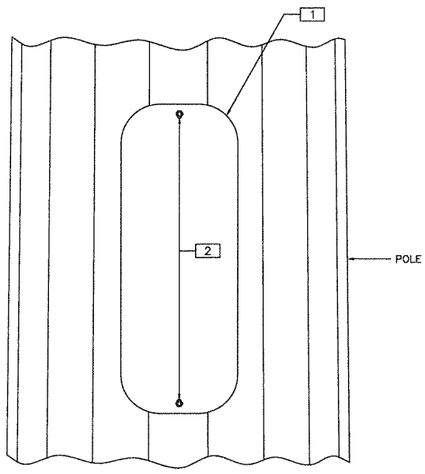

ELEVATION VIEW

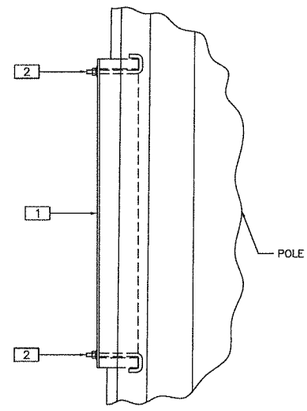

SIDE VIEW

THIS DRAWING MAY CONTAIN PROPRIETARY AND CONFIDENTIAL MATERIAL. UNAUTHORIZED DUPLICATION OR DISSEMINATION OF THIS DOCUMENT OR THE INFORMATION IT CONTAINS IS PROHIBITED.

PROPERTY OF TAPP, INC.
2427 KELLY LANE
HOUSTON, TEXAS. 77066 U.S.A.
PHONE 281-444-8277 FAX 281-444-7270

TransAmerican
Power Products, Inc.
2427 Kelly Lane
Houston, Texas 77066

DWN	DATE	
BH	06/10/03	TAPP STANDARD
CHK	DATE	TELECOMMUNICATION STRUCTURE
APP	DATE	HANDHOLE COVER INSTALLATION

CUST. P.O. NUMBER	TAPP ORDER No.	DRAWING No.	SH/OF	SCALE	REV.
N/A	STANDARD	HH-01	1 OF 1	NTS	0

BILL OF MATERIAL

Item#	Qty.	Part No.	Description	Wt./ea.	Total Wt.
1	2	00-B3A	BUSS BAR ATTACH. ANGLE; L 4" x 4" x 1/4" x 1'-2" (A36)	8	8
2	2	--	COPPER BUSS BAR; 1/4" x 4" x 12' W/ UNIVERSAL HARDWARE KIT	-	-
3	4	--	#5/8" x 2" A325 BOLTS W/ NUT-LKW-FW	-	-

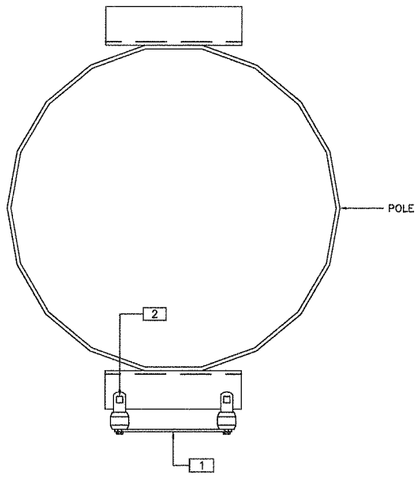

PLAN VIEW
SHOWN ON ONE SIDE FOR CLARITY

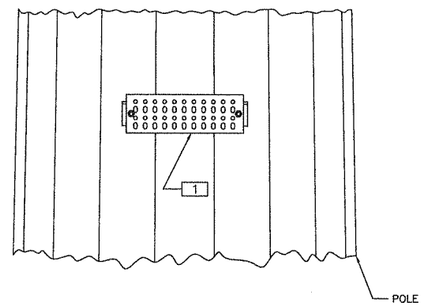

ELEVATION VIEW

FIELD NOTES:
1. DRAWING IS AN ILLUSTRATION ONLY. ADJUSTMENTS MAY NEED TO BE MADE IN THE FIELD.
2. BUSS BARS ARE TO BE INSTALLED AS SHOWN.

THIS DRAWING MAY CONTAIN PROPRIETARY AND CONFIDENTIAL MATERIAL. UNAUTHORIZED DUPLICATION OR DISSEMINATION OF THIS DOCUMENT OR THE INFORMATION IT CONTAINS IS PROHIBITED.

PROPERTY OF TAPP, INC.
2427 KELLY LANE
HOUSTON, TEXAS, 77066 U.S.A.
PHONE 281-444-8277 FAX 281-444-7270

TransAmerican
Power Products, Inc.
2427 Kelly Lane
Houston, Texas 77066

DWN	DATE	
EMM	4/14/04	TAPP STANDARD
CHK	DATE	TELECOMMUNICATION STRUCTURE
APP	DATE	BUSS BAR INSTALLATION

CUST. P.O. NUMBER	TAPP ORDER No.	DRAWING No.	SH/OF	SCALE	REV.
N/A	STANDARD	GR-04	1 OF 1	NTS	0

BILL OF MATERIAL

Item#	Qty.	Part No.	Description	Wt./ea.	Total Wt.
1	1	--	EXIT PORT COVER	--	--
2	2	--	J-BOLT; 3/8" x 6 1/2" x 1 1/2" x 4"	--	--
			BLACK WT.		--
			GALV. WT.		--

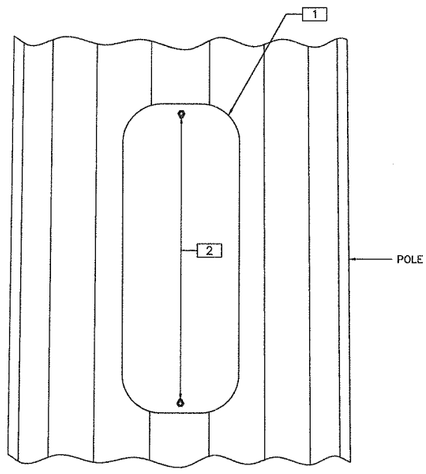

ELEVATION VIEW

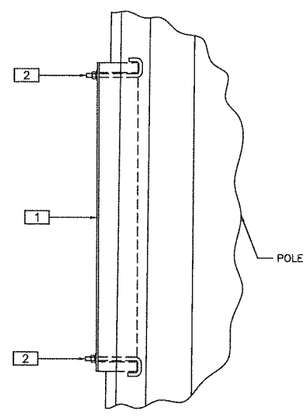

SIDE VIEW

THIS DRAWING MAY CONTAIN PROPRIETARY AND CONFIDENTIAL MATERIAL. UNAUTHORIZED DUPLICATION OR DISSEMINATION OF THIS DOCUMENT OR THE INFORMATION IT CONTAINS IS PROHIBITED.

PROPERTY OF TAPP, INC.
2427 KELLY LANE
HOUSTON, TEXAS, 77066 U.S.A.
PHONE 281-444-6277 FAX 281-444-7270

TransAmerican
Power Products, Inc.
2427 Kelly Lane
Houston, Texas 77066

DWN	DATE	TAPP STANDARD
BH	06/10/03	
CHK	DATE	TELECOMMUNICATION STRUCTURE
APP	DATE	EXIT PORT COVER INSTALLATION

CUST. P.O. NUMBER	TAPP ORDER No.	DRAWING No.	SH/OF	SCALE	REV.
N/A	STANDARD	EP-01	1 OF 1	NTS	0

TAOS ATTORNEY, LLC
SCOTT H. SANGER, ATTORNEY
ABBY G. SANGER, ATTORNEY
630 PASEO DEL PUEBLO SUR, SUITE 160
TAOS, NEW MEXICO 87571

DEED OF GIFT
DEDICATION AND ACCEPTANCE

Kachina Property Owners Association, Inc., a New Mexico Nonprofit Corporation, whose mailing address is: c/o Benjamin K. Cook, P.O. Box 66, Taos Ski Valley, NM, 87525, for consideration, Dedicates, Gifts, Grants and Conveys to Village of Taos Ski Valley, a Municipality of the State of New Mexico, whose mailing address is: P.O. Box 100, Taos Ski Valley, NM, 87525, its interest in the Real Estate legally described on Exhibit "A" attached hereto and hereby made a part hereof, with Special Warranty Covenants, and subject to current Real Estate Taxes not yet due and payable and Easements, Covenants, Reservation and Restrictions of Record, and conditions on the ground.

Witness our hands and seals this _____ day of _____, 2018.

Kachina Property Owners Association
A New Mexico Nonprofit Corporation

_____
Benjamin K. Cook, as its President

ATTEST: _____
David Borns, as its Secretary

STATE OF NEW MEXICO)
)SS:
COUNTY OF TAOS)

On this _____ day of _____, 2018, before me personally appeared Benjamin K. Cook and David Borns, President and Secretary of the Kachina Property Owners Association, Inc., to me known to be the persons described in and who executed the foregoing instrument, and acknowledged that they executed the same as their own free acts and deeds, as President and Secretary, respectively.

(SEAL)

_____
Notary Public
My Commission Expires:_____

DEDICATION ACCEPTED THIS _____ DAY OF _____, 20____
By VILLAGE OF TAOS SKI VALLEY, NEW MEXICO.

VILLAGE OF TAOS SKI VALLEY,
A Municipality of the State of New Mexico

By:_____
Christof Brownell, Mayor ATTEST:

By:_____
Ann Marie Wooldridge, Village Clerk
APPROVED BY:

By:_____
_____, Village Attorney

STATE OF NEW MEXICO)
)SS:
COUNTY OF TAOS)

On this _____ day of _____, 2018, before me personally appeared Christof Brownell, Mayor, Village of Taos Ski Valley, New Mexico, to me known to be the person described in and who executed the foregoing instrument, and acknowledged that he executed the same as his own free act and deed.

(SEAL)

_____
Notary Public
My Commission Expires:_____

STATE OF NEW MEXICO)
)SS:
COUNTY OF TAOS)

On this _____ day of _____, 2018, before me personally appeared Ann Marie Wooldridge, Clerk of the Village of Taos Ski Valley, New Mexico, to me known to be the person described in and who executed the foregoing instrument, and acknowledged that she executed the same as her own free act and deed.

(SEAL)

_____
Notary Public
My Commission Expires:_____

STATE OF NEW MEXICO)
)SS:
COUNTY OF _____)

On this _____ day of _____, 2018, before me personally appeared _____, Esq., Attorney for the Village of Taos Ski Valley, New Mexico, to me known to be the person described in and who executed the foregoing instrument, and acknowledged that he executed the same as his own free act and deed.

(SEAL)

_____
Notary Public
My Commission Expires:_____

EXHIBIT "A"

PARCEL 1

A tract of land located in Section 10, Township 27 North, Range 14 East, N.M.P.M. and being that certain parcel depicted as "East Open Space" on sheet 2 of 3 of a Final Subdivision Plat entitled "Kachina Subdivision Block O" prepared by Red Tail Surveying, Inc., Robert A. Watt, NMPS No.
11770, as Job No. 960.01 0, dated February 3, 2004 and filed for record in Cabinet E, Page 44-B in the Office of the County Clerk, County of Taos, State of New Mexico.

Containing 1.093 acres, more or less.

PARCEL 2

A tract of land located in Section 10, Township 27 North, Range 14 East, N.M.P.M. and being that certain parcel depicted as "Southeast Open" on sheet 2 of 3 of a Final Subdivision Plat entitled "Kachina Subdivision Block O" prepared by Red Tail Surveying, Inc., Robert A. Watt, NMPS No.
11770, as Job No. 960.01 0, dated February 3, 2004 and filed for record in Cabinet E, Page 44-B in the Office of the County Clerk, County of Taos, State of New Mexico.

Containing 0.259 acres, more or less.

EXHIBIT "A" (continued)

PARCEL 3

A tract of land located in Section 10, Township 27 North, Range 14 East, N.M.P.M. and being that certain parcel depicted as "Southwest Open Space" on sheet 3 of 3 of a Final Subdivision Plat entitled "Kachina Subdivision Block O" prepared by Red Tail Surveying, Inc., Robert A.
Watt, NMPS No. 11770, as Job No. 960.01 0, dated February 3, 2004 and filed for record in Cabinet E, Page 44-B in the Office of the County Clerk, County of Taos, State of New Mexico.

Containing 4.762 acres, more or less.

Less and except

A tract of land within the Antoine Leroux Grant in the Village of Taos Ski Valley, Taos County, New Mexico, shown on the Taos County Property ID Maps within Projected Section 10, Township 27 North, Range 14 East, NMPM, described as part of the Southwest Open Space of Block O of the Kachina Village Subdivision, and more particularly described as follows:

BEGINNING at a 1/2" rebar found with a cap stamped LS 5213, from whence a monument with an aluminum cap stamped LS 11183 found at the former site of the Taos Ski Valley medevac helipad bears N 49° 54' 56" W, 7,062.36 ft. distant, thence:

S 71° 41' 24" E, 10.53 ft. to a 1/2" rebar found with a cap stamped LS 11183, thence:
N 03° 54' 54" W, 124.84 ft. to the NW corner of this tract, a 1/2" rebar set with a cap stamped NMPS 11770, thence:
S 50° 17' 38" E, 11.57 ft. to the NE corner of this tract, a 1/2" rebar found with a cap stamped LS 5213, thence:
S 17° 30' 46" E, 159.29 ft. to a 1/2" rebar found with a cap stamped LS 5213, thence:
S 17° 08' 46" E, 116.82 ft. to the SE corner of this tract, a 1/2" rebar set, thence:
N 74° 59' 11" W, 161.64 ft. to the SW corner of this tract, a 1/2" rebar set, thence:
N 67° 15' 49" E, 24.94 ft. to a 1/2" rebar set, thence:
N 29° 50' 49" E, 84.50 ft. to a 1/2" rebar set, thence:
N 03° 52' 11" W, 24.94 ft. to the POINT OF BEGINNING.

This tract contains 0.328 acre more or less, as shown on Red Tail Surveying, Inc. plat no. 1997.01, entitled Kachina Property Owners Association to Don C. Quast, dated 5 May 2016, prepared by Robert A. Watt, NMPS #11770.

Containing 4.434 acres, more or less

PARCEL 4

Being that certain ±1.735 acre tract of land depicted as "Open Space" on Sheet 4 of 6 of a Plat of Existing and Proposed Development entitled "Replat of Lot 1, Block 3, Kachina Village Subdivision, Additions to Block 3, Lot 1-6 & Open Space" prepared by AGS Land Surveying, Ann Gilmor Stewart, NMPS No. 11183, as Job No. 555, dated March 2002, and filed for record in Cabinet D, Page 182-A in the Office of the County Clerk, County of Taos, State of New Mexico, within Section 15, Township 27 North, Range 14 East, N.M.P.M. located in the Village of Taos Ski Valley, Taos County, New Mexico.

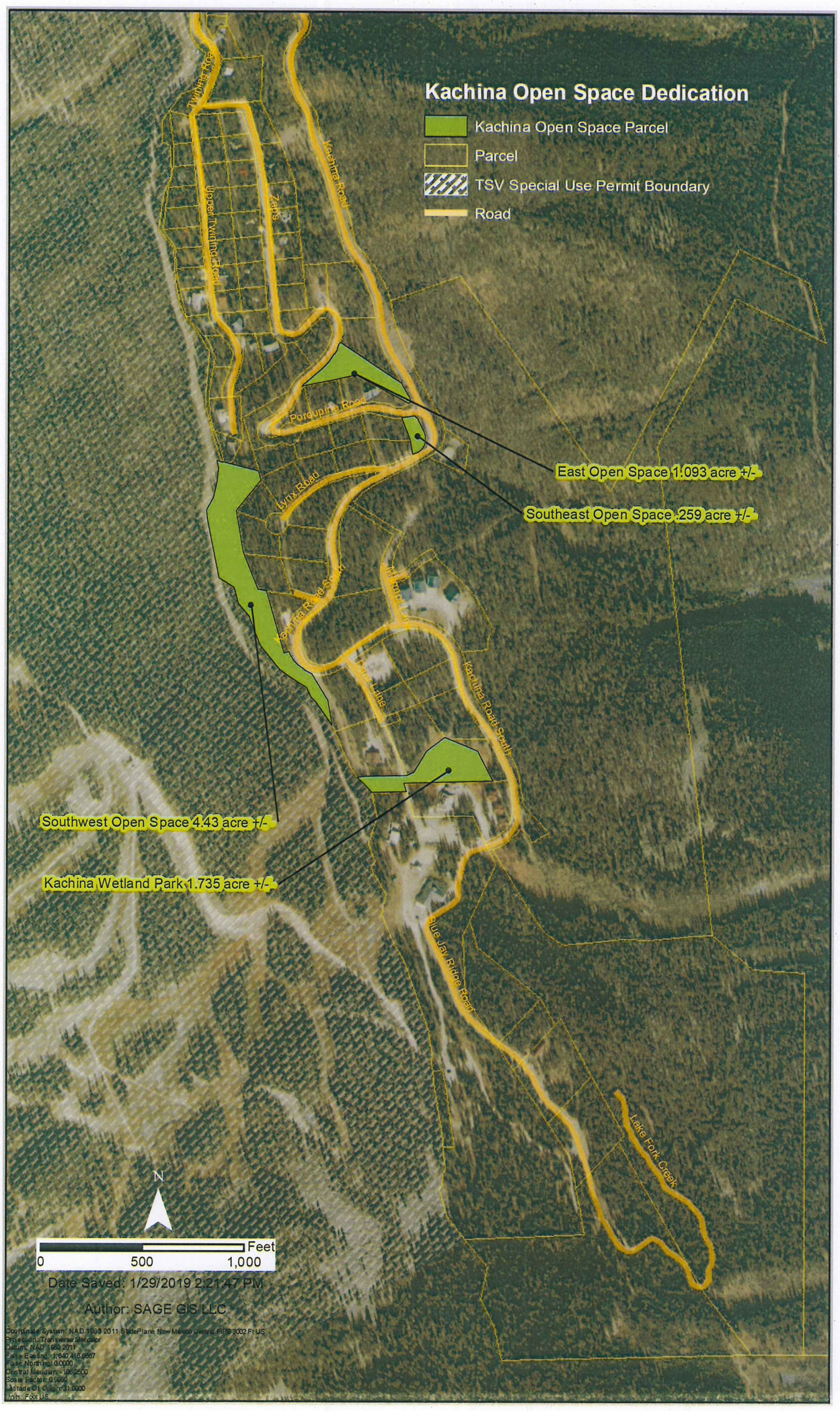
Kachina Open Space Dedication
Kachina Open Space Parcel
Parcel
TSV Special Use Permit Boundary
Road
Twilight Road
Upper Twilight Road
Zahn
Kachina Road
Porcupine Road
Lynx Road
Kachina Road South
Kachina Road South
Blue Jay Ridge Road
Lake Fork Creek
East Open Space 1.093 acre +/-
Southeast Open Space .259 acre +/-
Southwest Open Space 4.43 acre +/-
Kachina Wetland Park 1.735 acre +/-
N
Feet
0
500
1,000
Date Saved: 1/29/2019 2:21:47 PM
Author: SAGE GIS LLC