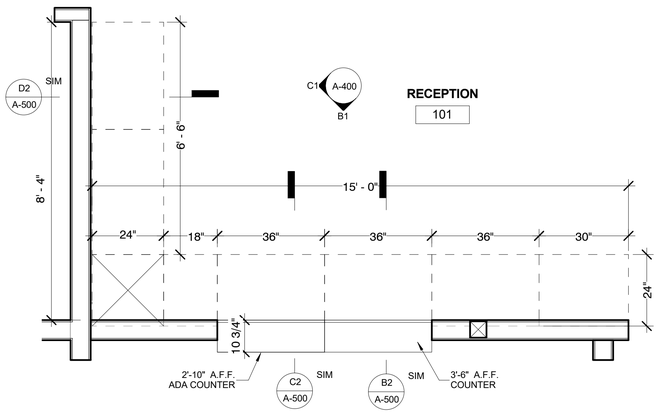

A1 ENLARGED RECEPTION AREA PLAN
1/2" = 1'-0"

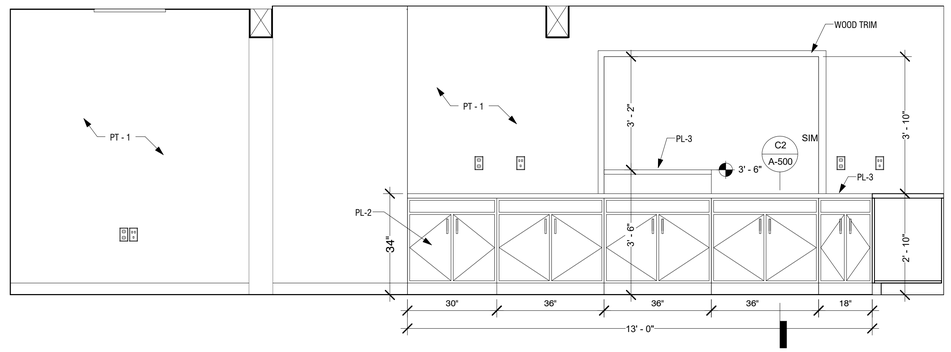

B1 RECEPTION 101 SOUTH
1/2" = 1'-0"

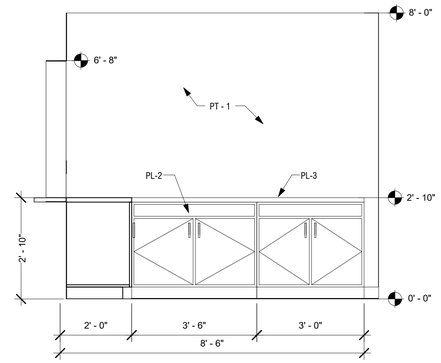

C1 RECEPTION 101 WEST
1/2" = 1'-0"

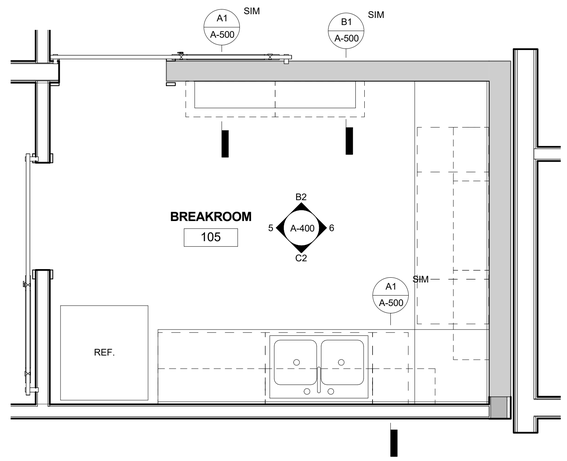

A2 ENLARGED BREAKROOM
1/2" = 1'-0"

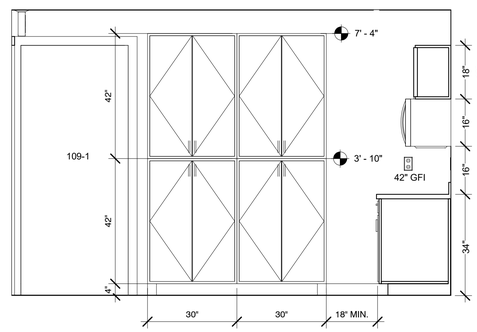

B2 BREAKROOM 105 NORTH
1/2" = 1'-0"

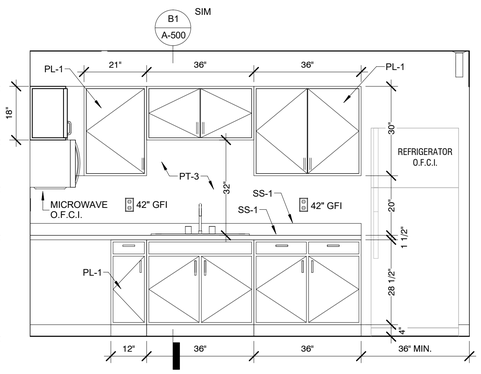

C2 BREAKROOM 105 SOUTH
1/2" = 1'-0"

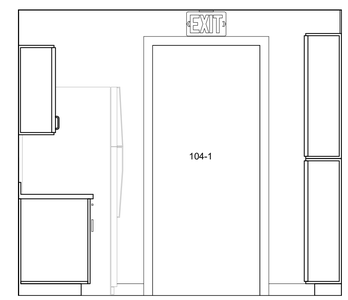

5 BREAKROOM 105 WEST
1/2" = 1'-0"

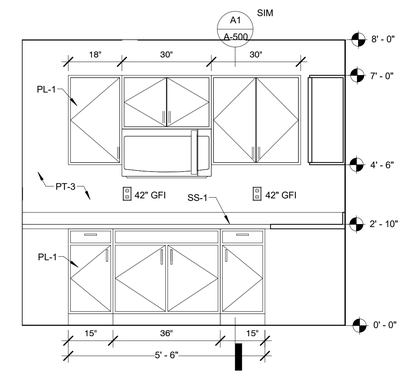

6 BREAKROOM 105 EAST
1/2" = 1'-0"

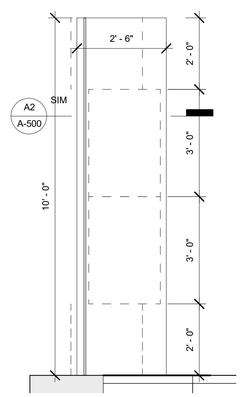

1 ENLARGED PLAN REVIEW PLAN
CASEWORK
1/2" = 1'-0"

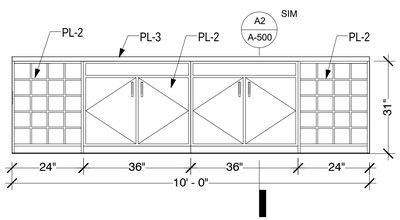

2 PUBLIC WORKS 201 CASEWORK
1/2" = 1'-0"

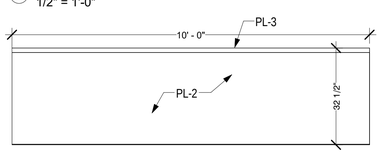

3 PUBLIC WORKS 201 CASEWORK BACK
1/2" = 1'-0"

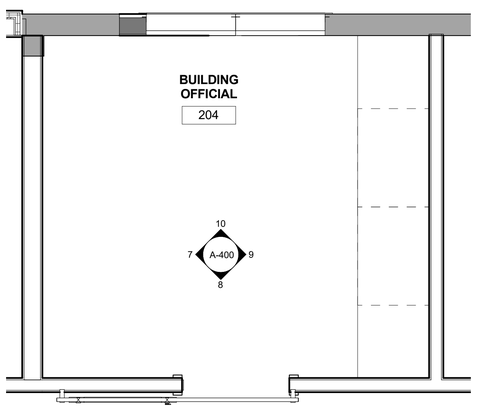

4 ENLARGED BUILDING OFFICIAL
1/2" = 1'-0"

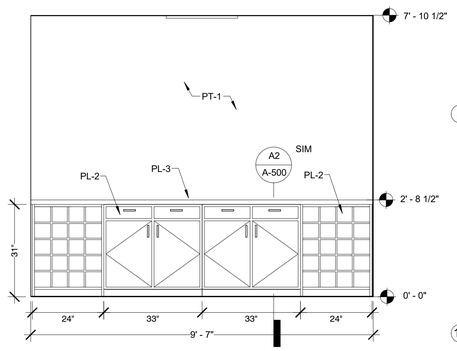

9 BUILDING OFFICIAL 204 EAST
1/2" = 1'-0"

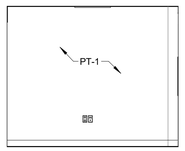

7 BUILDING OFFICIAL 204 WEST
1/4" = 1'-0"

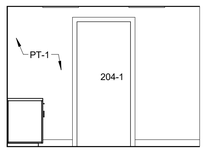

8 BUILDING OFFICIAL 204 SOUTH
1/4" = 1'-0"

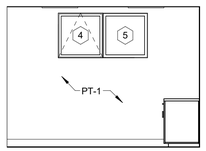

10 BUILDING OFFICIAL 204 NORTH
1/4" = 1'-0"

LIVING
DESIGNS
GROUP
ARCHITECTS
122A Doña Luz St.
Taos, NM 87571
t: 575. 751. 9481
www.ldgtaos.com

STATE OF NEW MEXICO
DOUGLAS JON PATTERSON
No. 004426
10-18-18
REGISTERED ARCHITECT

THIS DESIGN IS CONFIDENTIAL AND PROPRIETARY OF LDG INC NO REUSE AUTHORIZED ©2016

VTSV ADMINISTRATION BUILDING

CONSTRUCTION DOCUMENTS

1346 NM 150, VILLAGE OF TAOS SKI VALLEY, NM 87525

PROJ. NO: 2018-600

ISSUE DATE: 10/18/18

ISSUED FOR:

REVISIONS:

NO	DATE	DESCRIPTION

DRAFTED BY: LDG
APPROVED BY: LDG

SCALE: As indicated

ENLARGED PLANS & INTERIOR ELEVATIONS

A-400

Z:\010 ACTIVE PROJECTS\2018-600 VTSV Admin\09 CAD\JB\2018-600 - VTSV ADMIN BID SET - JB LOCAL 10.12.18.rvt