2005 Set

DESIGN CRITERIA

HEADWORKS PEAK HOUR = 0.5MGD

PLANT PEAK HOUR = 0.4MGD

MAX MONTH AVERAGE DAILY FLOW = 0.2MGD

BOD = 250 MG/L

TSS = 275 MG/L

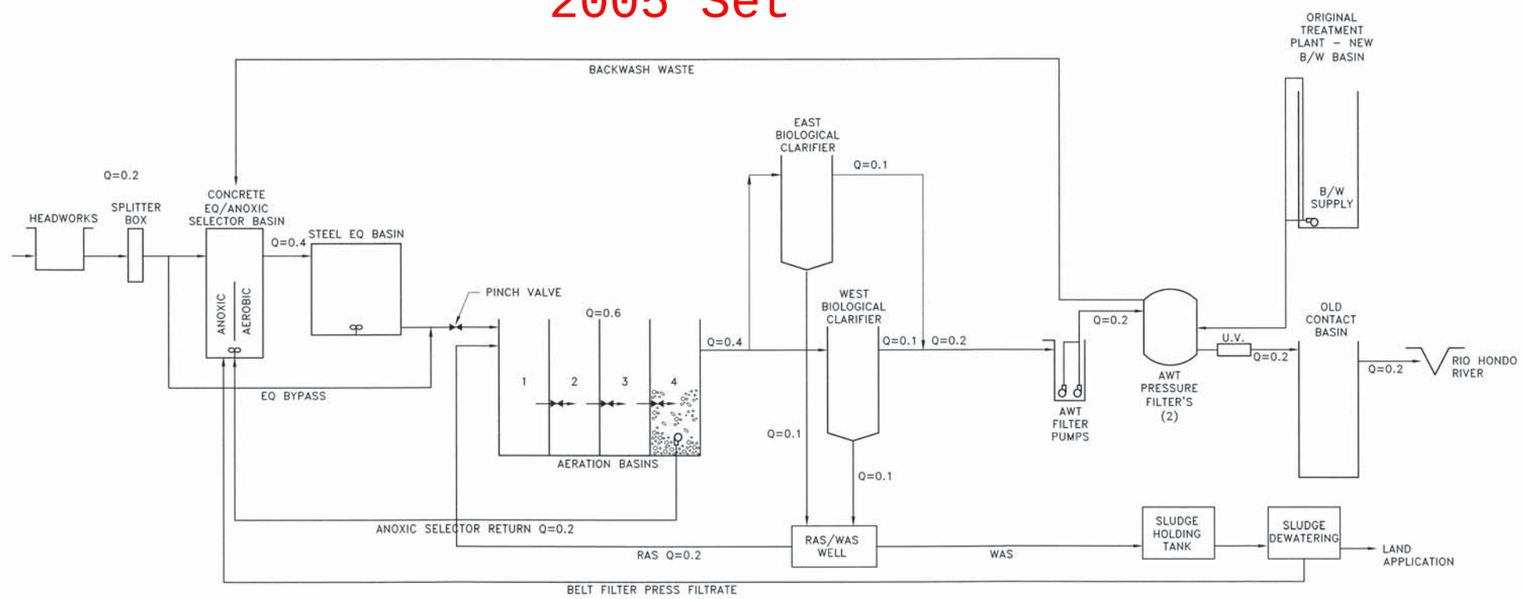

PLANT FLOW SCHEMATIC

NTS

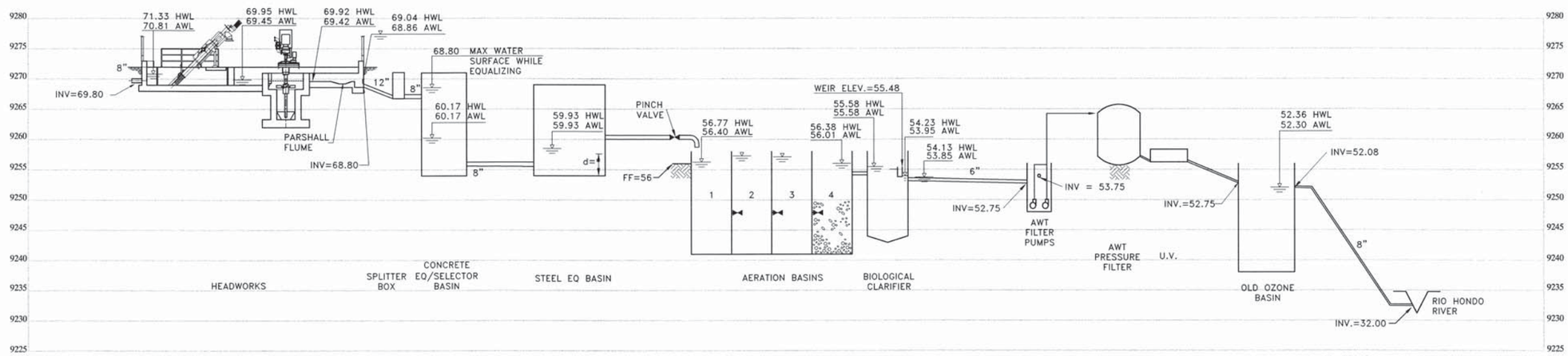

* DRAIN LINE 4" ABOVE FF

EQ LINE AND INLET "TO BE FIELD DETERMINED"

FEMA PANEL 3500780275C, NO KNOWN FLOOD PLAIN ELEVATION

HYDRAULIC PROFILE

VERT. SCALE: 1"=10'

E:\2004 Project\04087.05\G3 HYDRAULIC PLAN AND PROFILE.dwg Last Saved: 3/23/2005 7:37 AM AutoCad Ver: 16.1S (LMS TECH)

NO.	DATE	REVISIONS	BY

DRAWN RLN, JWL DESIGNED KJS DATE 03-2005
CHECKED KES
SCALE AS SHOWN APPROVED KES PROJ. NO. 04021B

The **Engineering** Company
2310 East Prospect Road, Suite B Fort Collins, CO 80525
(970) 484-7477 www.Tec-engrs.Com

WASTEWATER TREATMENT PLANT IMPROVEMENTS
TAOS SKI VALLEY, NEW MEXICO

HYDRAULIC PROFILE AND PLANT FLOW SCHEMATIC

SCALE VERIFICATION 0 1" IF NOT 1 INCH ON THIS SHEET, ADJUST SCALES ACCORDINGLY

SHEETS 31

SHEET G2

2005 Set

INSTALL ADJUSTABLE TIMER FOR EXISTING WAS CENTRIFUGAL PUMP FOR PUMPING WAS FROM EXISTING MAIN TREATMENT PLANT TO EXISTING SLUDGE HOLDING TANKS.

EXISTING WAS BOOSTER PUMP INFORMATION

LOCATED IN EXISTING SLUDGE DEWATERING BUILDING
NO. OF PUMPS: 1
DESIGN OPERATING POINT: 42 GPM @ 92'
PUMP IS CONSTANT SPEED

INSTALL LEVEL DETECTION INSTRUMENTATION IN SLUDGE TANKS. SEE ELECTRICAL.

PRIOR TO START OF CONSTRUCTION, POTHOLE EXISTING WATERLINE AND VERIFY LOCATIONS, BURY DEPTHS, PIPE SIZE AND PIPE MATERIAL (2 LOCATIONS).

VERIFY LOCATION OF EXISTING PRV VALVE VAULT

EXISTING 2"GALV. POTABLE WATERLINE

GAS LINE TO BE RELOCATED BY OWNER.

12" DIP EQ INFLUENT

INV= 9266.84

FLOWLINE OF DITCH

12" DIP 45° BENDS

7'x5.5' CONCRETE PAD

PROPOSED HEADWORKS
SEE SHEET C1

FF 9274.00

INV= 9269.80

9278.0 HIGH POINT

9278.0 T.O.W. (VERIFY W/FINAL AS-BUILT GRADING)

4'x4' CONCRETE PAD

3' CONCRETE SIDEWALK

1" WATERLINE TAP SEE SHT C2

FLOWLINE OF DITCH

35 LF ~8" PVC @S= 0.88%

NEW MH 1
INV IN= 9270.21
INV OUT= 9270.11

8" DIP PLANT INFLUENT

239 LF ~ 8" DIP @S=0.88%

EXISTING MH #1
INV OUT= 9272.3

FIELD VERIFY BUILDING LOCATION WITH OWNER

APPROXIMATE LOCATION OF EXISTING 8" EQ INFLUENT. ABANDON IN PLACE FOLLOWING STARTUP OF NEW HEADWORKS. PLUG WITH CONCRETE AT SPLITTER BOX FOLLOWING STARTUP

VERIFY WATERLINE LOCATION AND ELEVATION. ENCASE 12" DIP EQ INFLUENT IN CONCRETE. SEE DETAIL ON SHEET C2.

CORE DRILL AND LINK SEAL FOR NEW SPLITTER BOX PIPING PENETRATION

SEE SHEET C10

1" LP GAS LINE SEE SPEC 15487

NEW GENERATOR AND CONC PAD

PRIOR TO CONSTRUCTION POTHOLE AND VERIFY LOCATION AND SIZE OF EXISTING WATERLINE AND GAS LINE, NOTIFY ENGINEER OF CONFLICTS WITH GENERATOR PAD

EXISTING ORIGINAL TREATMENT PLANT
SEE SHEET C8

EXISTING BAYS

EXISTING STEEL EQUALIZATION BASIN
SEE SHEET C10

EXISTING MAIN TREATMENT PLANT
SEE SHEET C3,C5

EXISTING MAINTENANCE BUILDING

NOTE:

LOCATION OF ALL LP GAS BURIED PIPING IS VERY APPROXIMATE. VERIFY LOCATIONS PRIOR TO EXCAVATIONS. OWNER TO RELOCATE LP GAS LINE IN AREA OF HEADWORK'S BUILDING EXCAVATION.

N

0 10 20 30 40
Scale: 1"= 20'

E:\2004 Project\04087.05\04021.10-04.dwg Last Saved: 3/23/2005 7:44 AM AutoCad Ver: 16.1S (LMS TECH)

NO.	DATE	REVISIONS	BY

DRAWN RLN,JWL DESIGNED KJS DATE 03-2005
CHECKED KJS
SCALE 1"=20' APPROVED KES PROJ. NO. 04021B

The **Engineering** Company
2310 East Prospect Road, Suite B Fort Collins, CO 80525
(970) 484-7477 www.Tec-engrs.Com

WASTEWATER TREATMENT PLANT IMPROVEMENTS
TAOS SKI VALLEY, NEW MEXICO

SITE PLAN

SCALE VERIFICATION
0 1"
IF NOT 1 INCH ON THIS SHEET, ADJUST SCALES ACCORDINGLY

SHEETS 31
SHEET G3

2005 Set

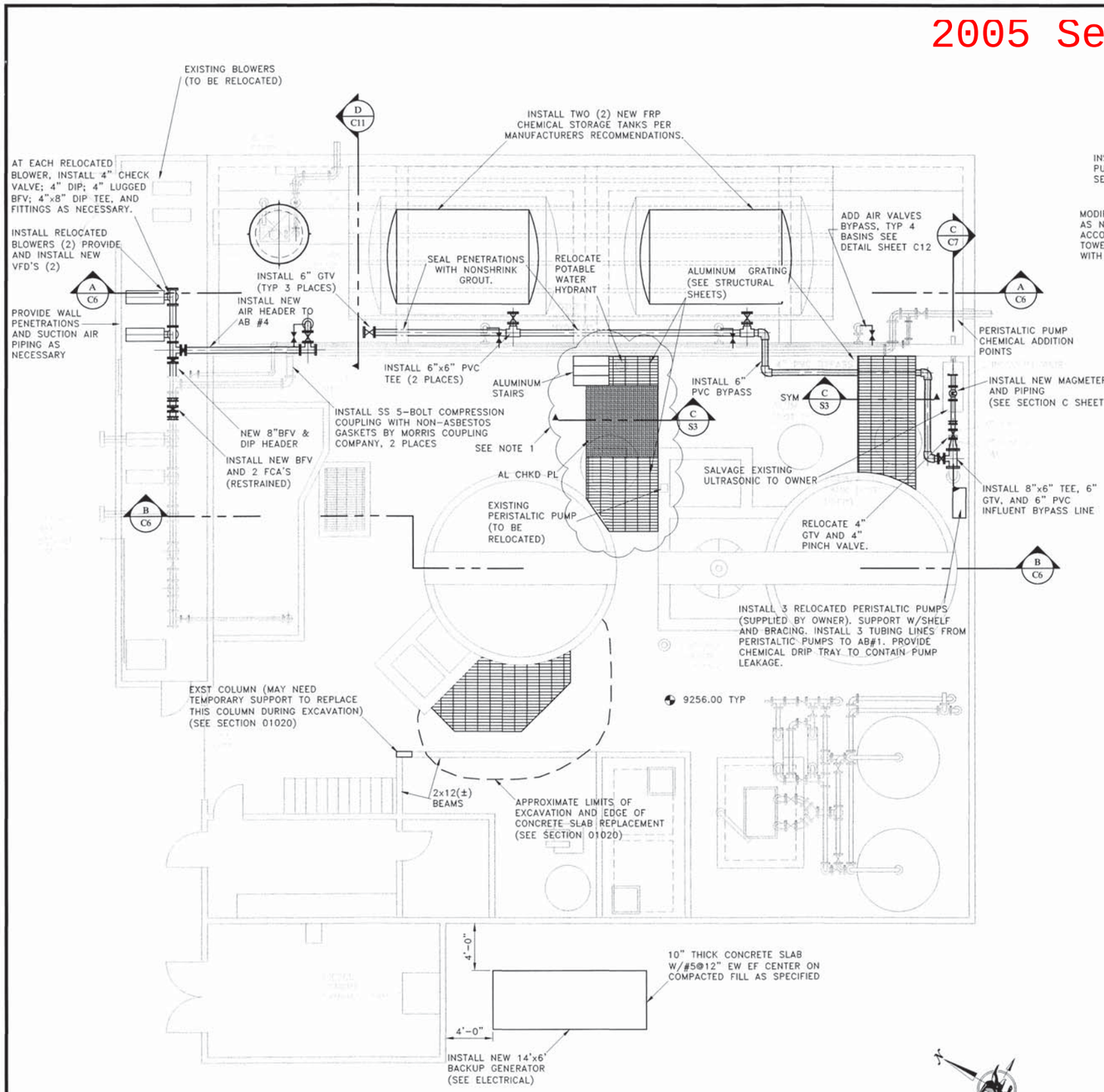

PLAN AT EL 9266.00

3/16"=1'-0"

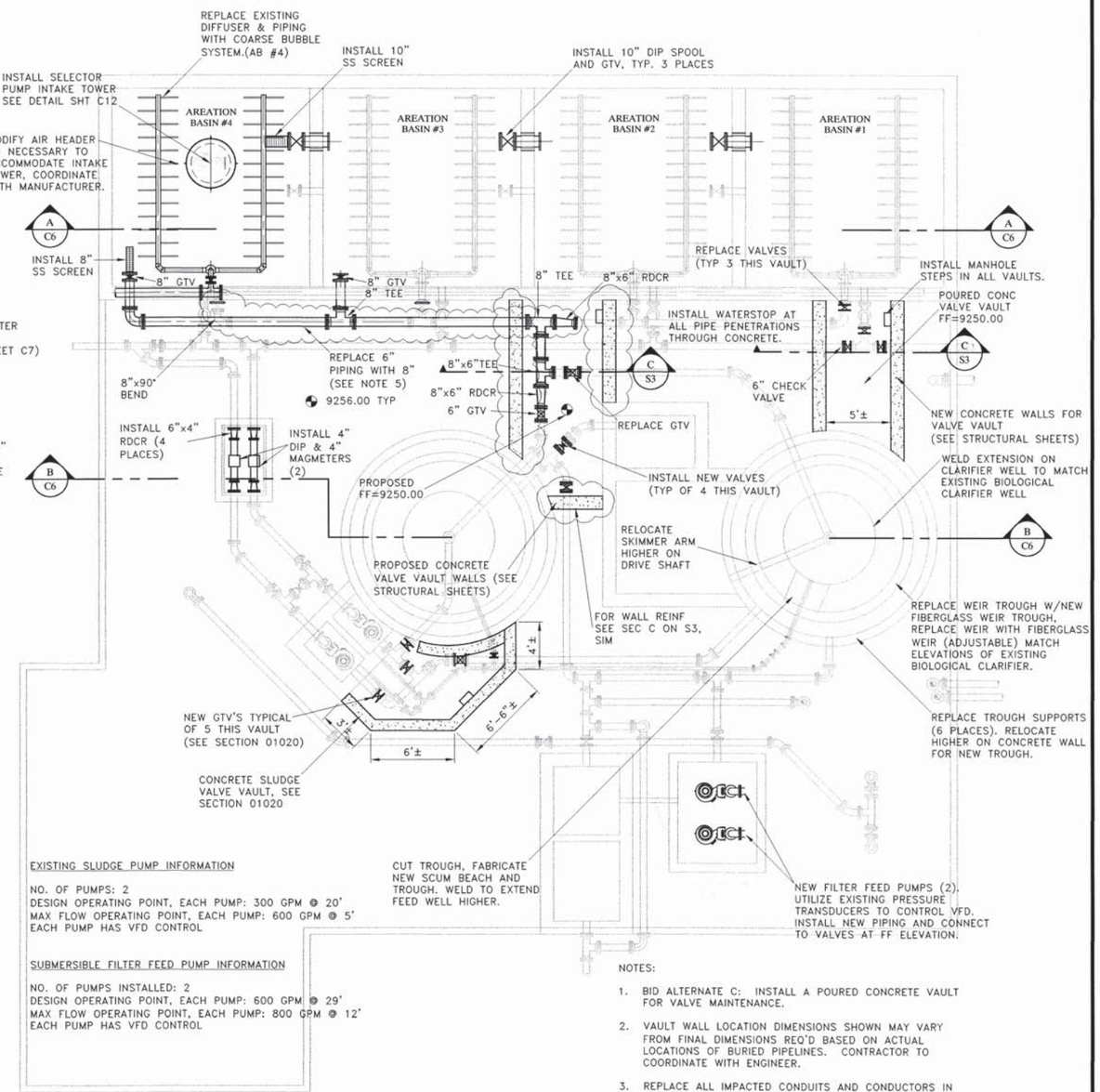

PLAN AT EL 9255.00

3/16"=1'-0"

EXISTING SLUDGE PUMP INFORMATION

NO. OF PUMPS: 2
DESIGN OPERATING POINT, EACH PUMP: 300 GPM @ 20'
MAX FLOW OPERATING POINT, EACH PUMP: 600 GPM @ 5'
EACH PUMP HAS VFD CONTROL

SUBMERSIBLE FILTER FEED PUMP INFORMATION

NO. OF PUMPS INSTALLED: 2
DESIGN OPERATING POINT, EACH PUMP: 600 GPM @ 29'
MAX FLOW OPERATING POINT, EACH PUMP: 800 GPM @ 12'
EACH PUMP HAS VFD CONTROL

NOTES:

1. BID ALTERNATE C: INSTALL A POURED CONCRETE VAULT FOR VALVE MAINTENANCE.
2. VAULT WALL LOCATION DIMENSIONS SHOWN MAY VARY FROM FINAL DIMENSIONS REQ'D BASED ON ACTUAL LOCATIONS OF BURIED PIPELINES. CONTRACTOR TO COORDINATE WITH ENGINEER.
3. REPLACE ALL IMPACTED CONDUITS AND CONDUCTORS IN FLOOR SLAB IMPACTED BY DEMO AND CONSTRUCTION ACTIVITIES.
4. LABEL EQUIPMENT PIECES WITH METAL TAGS PER SECTION 09900.
5. REPLACE EXISTING CONCRETE SLAB OVER NEW PIPING. REINFORCE WITH #5@16" EW. DRILL AND EPOXY NEW BARS INTO EXISTING SLAB.
6. PAINT ALL NEW EXPOSED PIPING, VALVES, PUMPS, SUPPORTS, AND EQUIPMENT PER SECTION 9900.

E:\2004 Project\04087.05\04021.10-03.dwg Last Saved: 3/23/2005 7:43 AM AutoCad Ver: 16.1S (LMS TECH)

NO.	DATE	REVISIONS	BY

DRAWN RLN,JWL | DESIGNED CJM | DATE 03-2005
CHECKED KES
SCALE 3/16"=1'-0" | APPROVED KES | PROJ. NO. 04021B

The Engineering Company
2310 East Prospect Road, Suite B Fort Collins, CO 80525
(970) 484-7477 www.Tec-engrs.Com

WASTEWATER TREATMENT PLANT IMPROVEMENTS
TAOS SKI VALLEY, NEW MEXICO

MAIN TREATMENT PLANT PLANS

SCALE VERIFICATION: 0 — 1" IF NOT 1 INCH ON THIS SHEET, ADJUST SCALES ACCORDINGLY

SHEETS 31 | SHEET C5

2005 Set

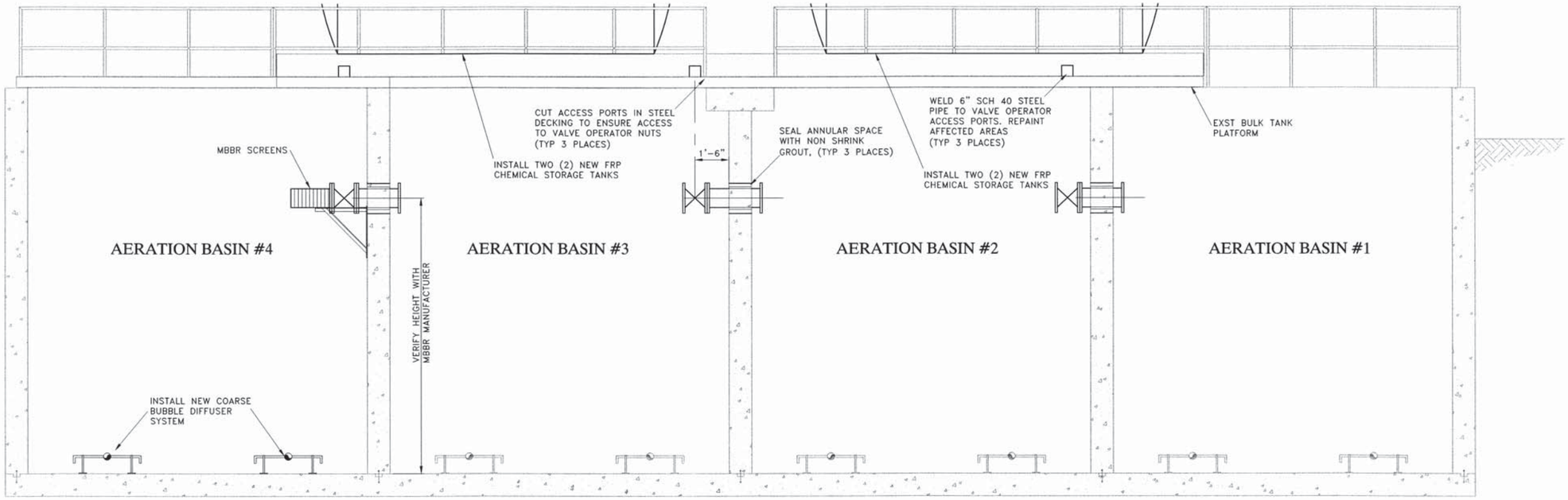

SECTION A/C5
3/8"=1'-0"

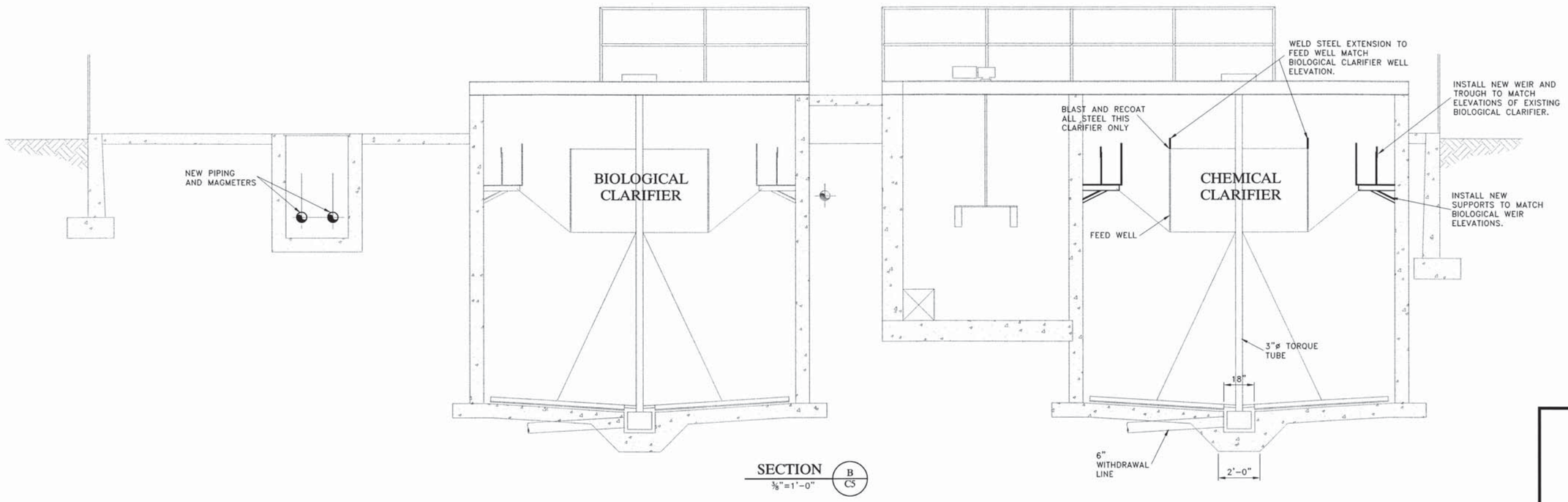

SECTION B/C5
3/8"=1'-0"

E:\2004 Project\04087.05\04021.10-06.dwg Last Saved: 3/23/2005 7:43 AM AutoCad Ver: 16.1S (LMS TECH)

NO.	DATE	REVISIONS	BY

DRAWN RLN,JWL DESIGNED CJM DATE 03-2005
CHECKED CJM
SCALE AS SHOWN APPROVED KES PROJ. NO. 04021B

The **Engineering** Company
2310 East Prospect Road, Suite B Fort Collins, CO 80525
(970) 484-7477 www.Tec-engrs.Com

WASTEWATER TREATMENT PLANT IMPROVEMENTS
TAOS SKI VALLEY, NEW MEXICO

MAIN TREATMENT PLANT SECTIONS

SCALE VERIFICATION 0 1" IF NOT 1 INCH ON THIS SHEET, ADJUST SCALES ACCORDINGLY

SHEETS 31 SHEET C6

1982 Set

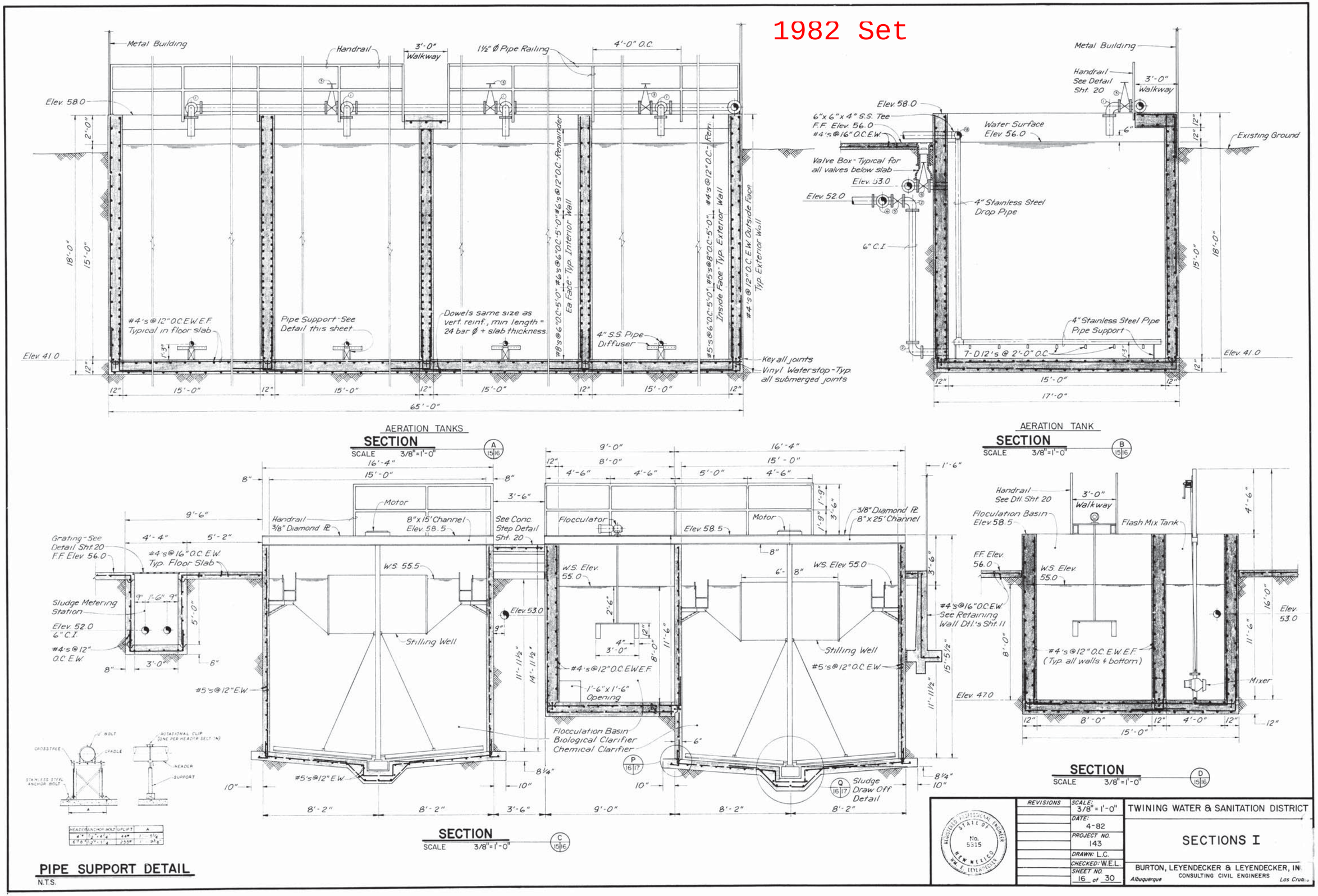

Metal Building
Handrail
3'-0" Walkway
1½" Ø Pipe Railing
4'-0" O.C.
Elev. 58.0
#4's @ 12" O.C. E.W. E.F. Typical in floor slab
Pipe Support - See Detail this sheet
Dowels same size as vert. reinf., min length = 24 bar Ø + slab thickness
4" S.S. Pipe Diffuser
#8's @ 6" O.C. - 5'-0" #6's @ 6" O.C. - 5'-0" #6's @ 12" O.C. - Remainder Ea Face - Typ. Interior Wall
#5's @ 6" O.C. - 5'-0" #5's @ 8" O.C. - 5'-0" #4's @ 12" O.C. - Rem. Inside Face - Typ. Exterior Wall
#4's @ 12" O.C. E.W. Outside Face Typ. Exterior Wall
Key all joints
Vinyl Waterstop - Typ. all submerged joints
Elev. 41.0
65'-0"
AERATION TANKS
SECTION
SCALE 3/8" = 1'-0"
Metal Building
Handrail See Detail Sht. 20
3'-0" Walkway
Elev. 58.0
6" x 6" x 4" S.S. Tee F.F. Elev. 56.0 #4's @ 16" O.C. E.W.
Water Surface Elev. 56.0
Existing Ground
Valve Box - Typical for all valves below slab
Elev. 53.0
Elev. 52.0
4" Stainless Steel Drop Pipe
6" C.I.
4" Stainless Steel Pipe Pipe Support
7-D12's @ 2'-0" O.C.
Elev. 41.0
17'-0"
AERATION TANK
SECTION
SCALE 3/8" = 1'-0"
Motor
Handrail 3/8" Diamond PL
8" x 15' Channel Elev. 58.5
See Conc. Step Detail Sht. 20
Flocculator
Elev. 58.5
3/8" Diamond PL 8" x 25' Channel
Grating - See Detail Sht. 20 F.F. Elev. 56.0
#4's @ 16" O.C. E.W. Typ. Floor Slab
W.S. 55.5
W.S. Elev. 55.0
Sludge Metering Station
Elev. 52.0 6" C.I.
#4's @ 12" O.C. E.W.
Stilling Well
Elev. 53.0
#4's @ 12" O.C. E.W. E.F.
1'-6" x 1'-6" Opening
#5's @ 12" E.W.
Flocculation Basin Biological Clarifier Chemical Clarifier
#5's @ 12" E.W.
Sludge Draw Off Detail
#4's @ 16" O.C. E.W. See Retaining Wall Dtl.'s Sht. 11
Elev. 47.0
Handrail See Dtl. Sht. 20
3'-0" Walkway
Floculation Basin Elev. 58.5
Flash Mix Tank
F.F. Elev. 56.0
W.S. Elev. 55.0
#4's @ 12" O.C. E.W. E.F. (Typ. all walls & bottom)
Mixer
Elev. 53.0
SECTION
SCALE 3/8" = 1'-0"
SECTION
SCALE 3/8" = 1'-0"
PIPE SUPPORT DETAIL
N.T.S.
REVISIONS
SCALE: 3/8" = 1'-0"
DATE: 4-82
PROJECT NO. 143
DRAWN: L.C.
CHECKED: W.E.L.
SHEET NO. 16 of 30
TWINING WATER & SANITATION DISTRICT
SECTIONS I
BURTON, LEYENDECKER & LEYENDECKER, INC.
CONSULTING CIVIL ENGINEERS
Albuquerque
Las Cruces

2015 Set

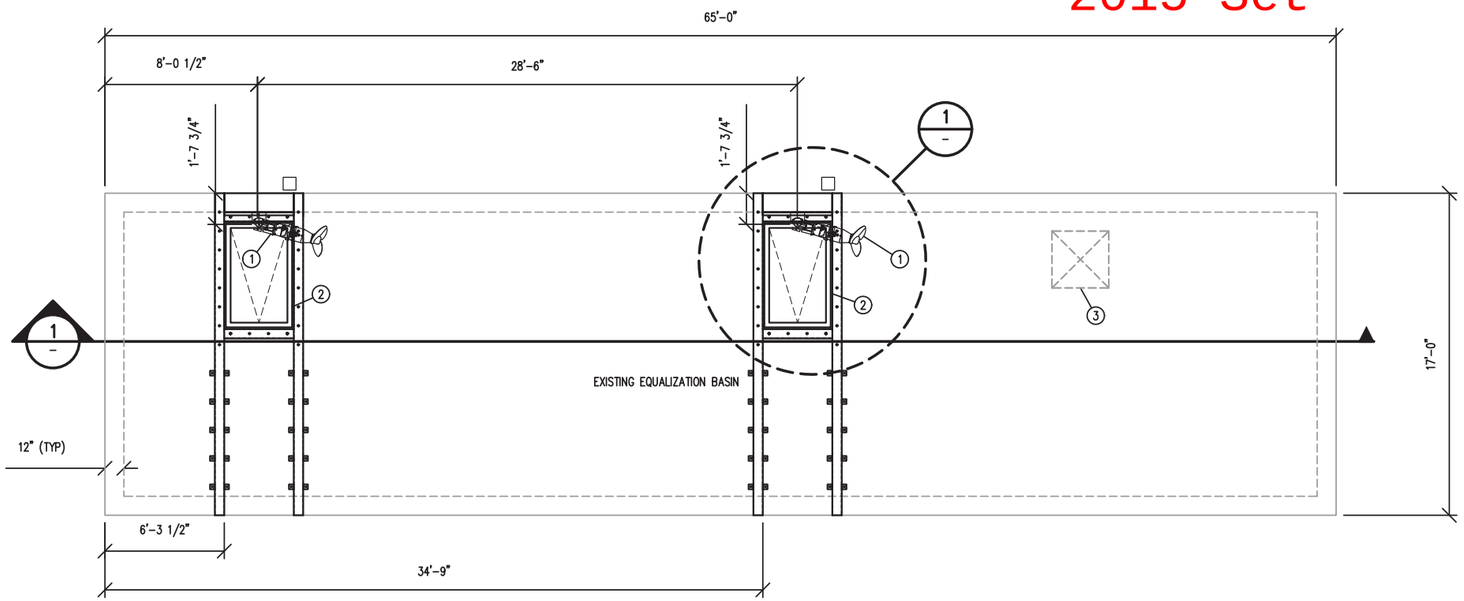

EQ BASIN PLAN
1/8"=1'-0"

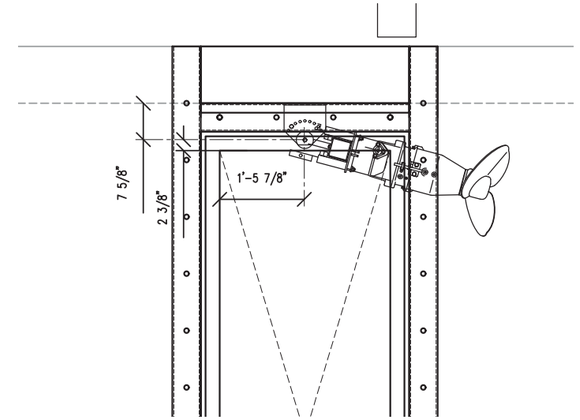

1 MIXER LOCATION DETAIL
3/8"=1'-0"

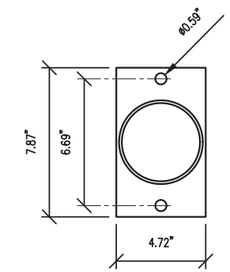

2 MAST BASE PLATE DETAIL
1-1/2"=1'-0"

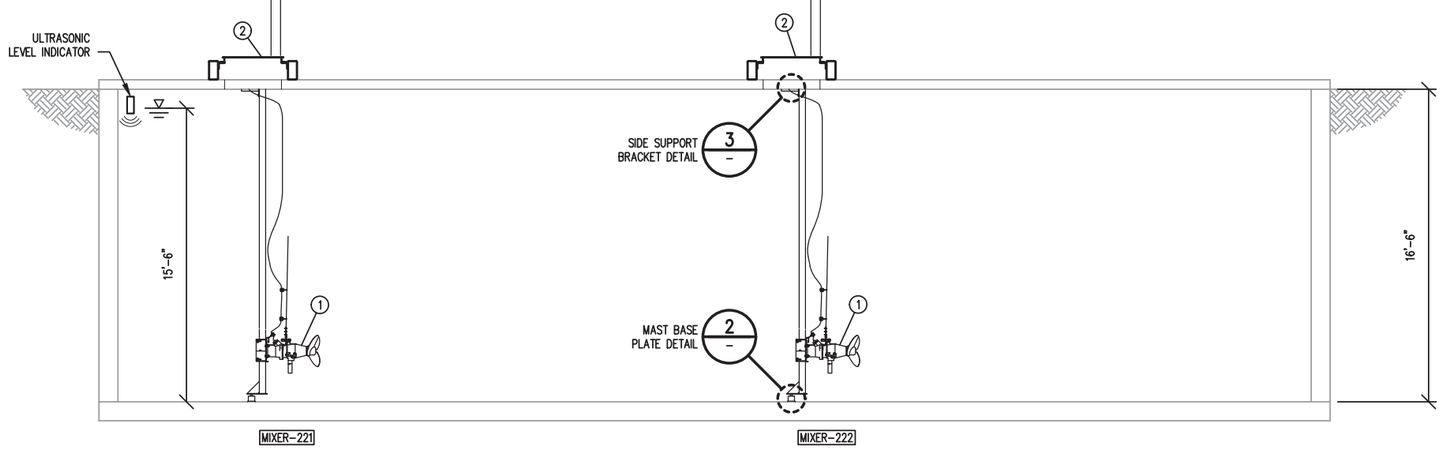

EQ BASIN SECTION 1
1/8"=1'-0"

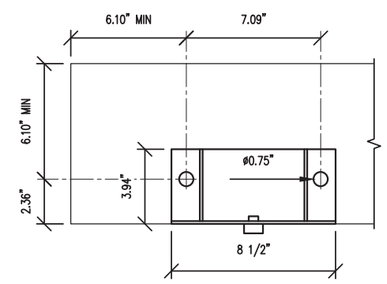

3 SIDE SUPPORT BRACKET DETAIL
1-1/2"=1'-0"

EQUIPMENT NOTES:

1. WILO MIXER
2. 60"x36" SURFACE MOUNTED HATCH RE: STRUC DWGS
3. EXST ACCESS HATCH AND LADDER
4. HOIST

Copyright: FEI Engineers Inc.

0 1 IF THIS BAR DOES NOT MEASURE 1" DRAWING IS NOT TO LABELED SCALE

FEI ENGINEERS

PRELIMINARY
NOT FOR CONSTRUCTION

REV. No.	DATE	DESCRIPTION
-	8/2015	-

VILLAGE OF TAOS SKI VALLEY
WASTEWATER TREATMENT FACILITY INTERIM IMPROVEMENTS

MIXER INSTALLATION PLAN

PROJECT No.: VTSV-S14-0132
DATE: 8/12/2015
DESIGNED BY: KV
DRAWN BY: SAJ, KPR
CHECKED BY: MAD

P1-01

LOCATION: W:\VTSV-S14-0132 - Mixers\P1-01.dwg PLOTTED: 8/12/2015 4:46 PM BY: Keith P. Rindt