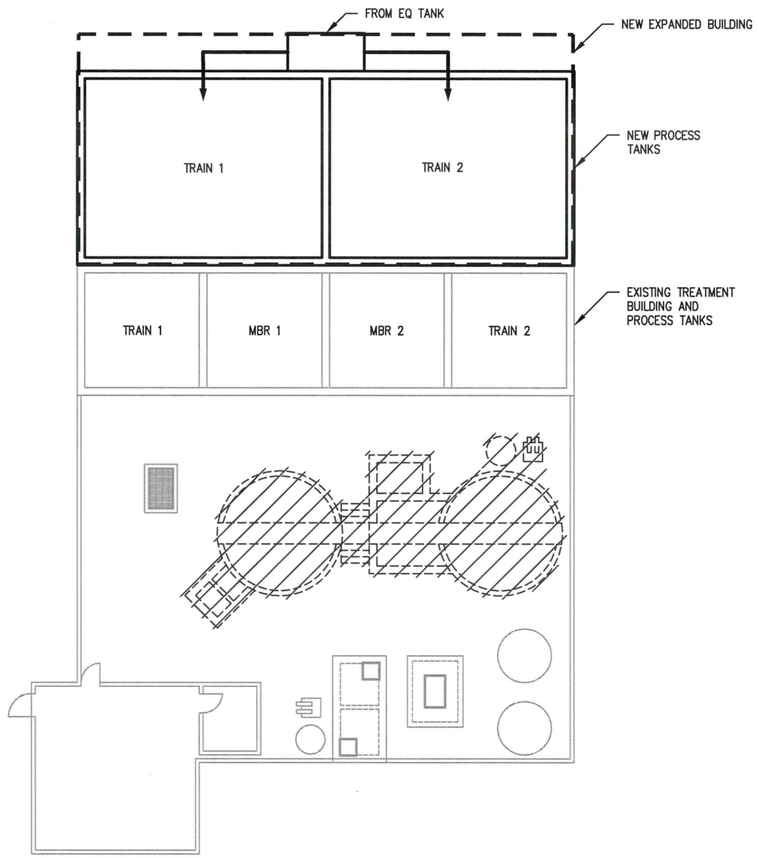

OPTION 1 – LAYOUT

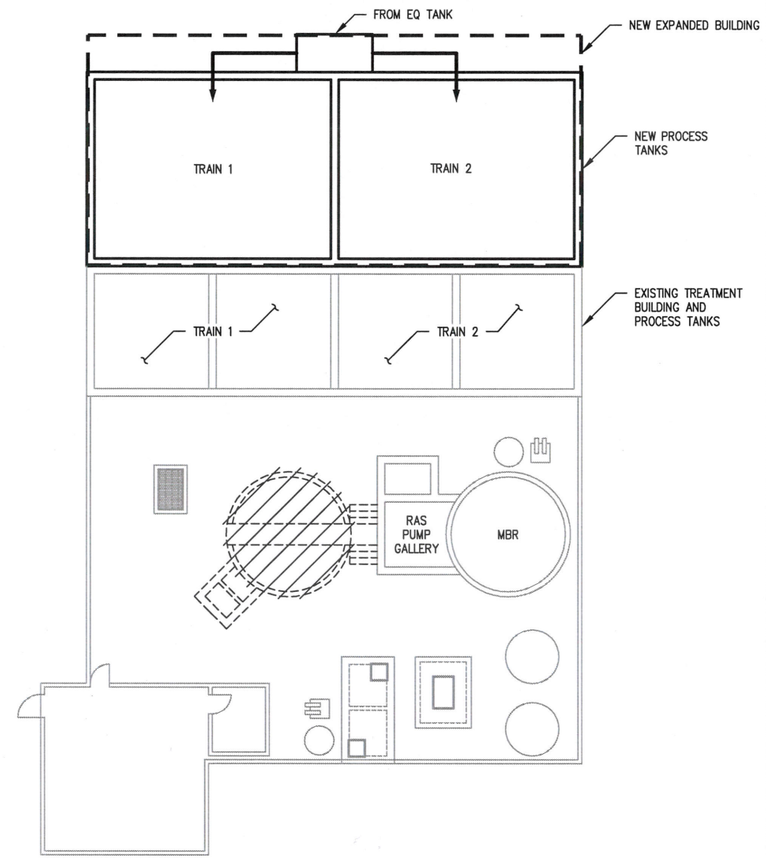

OPTION 2 – LAYOUT

GENERAL NOTES:

1. MAINTAIN THE SERVICE OF EXISTING INFLUENT EQ AS EQ.
2. USE PARALLEL TRAINS APPROACH TO ACHIEVE TREATMENT.
3. UTILIZE EXISTING AERATION BASINS TO BEST EXTENT POSSIBLE.
4. MAXIMUM SIDE WATER DEPTH FOR EXISTING TANKS AT 15 FEET.
5. PROPOSED NEW BASINS TO HAVE MAXIMUM WATER DEPTH OF 18 FEET.
6. MINIMIZE PROPOSED FOOTPRINT FOR NEW BASIN CONSTRUCTION.
7. EXISTING CLARIFIERS WILL BE DEMO'D AND FILLED TO MAKE ROOM FOR EQUIPMENT AND STORAGE, IN CASE OF OPTION 1 LAYOUT.
8. ONE CLARIFIER CAN BE USED AS MBR BASIN IF OPTION 2 LAYOUT IS CHOSEN. OTHER CLARIFIER WILL BE DEMO'D.
9. ALL PROCESS BASINS WILL BE COVERED BY THE NEW BUILDING.
10. WHEN EVALUATING TANKS SIZES VS. CHEMICAL ADDITIONS, TAKE INTO CONSIDERATION THE TRUE ANNUAL FLOW VOLUME (THERE ARE LARGE SEASONAL FLOW DIFFERENCES AND THERE IS 20–30 YEAR TIME LAG BEFORE PPF WILL BE ATTAINED).
11. PROVIDE ABILITY TO TAKE 1 TRAIN OFFLINE DURING SEASONAL LOW FLOWS.
12. PROVIDE ABILITY FOR EITHER OF THE TRAINS TO FEED EITHER OF THE MBR BASINS.
13. USE MICRO–C FOR SUPPLEMENTAL CARBON ADDITION, AND POLY ALUMINUM CHLORIDE FOR METAL SALT ADDITION.
14. REFER TO RFP FOR DESIGN PARAMETERS SUCH AS INFLUENT FLOW, BOD, TSS, TKN, AMMONIA, AND DESIGN TEMPERATURE.
15. THE EFFLUENT LIMITS SHALL BE MET WITH A 20% FACTOR OF SAFETY IF COMPUTER MODELING SUCH AS BIOWIN IS USED.
16. USE OF NITRATE RECYCLE (IMLR) IS PREFERABLE, BUT OPTIONAL. IF NOT PROPOSED, JUSTIFY LACK THEREOF.

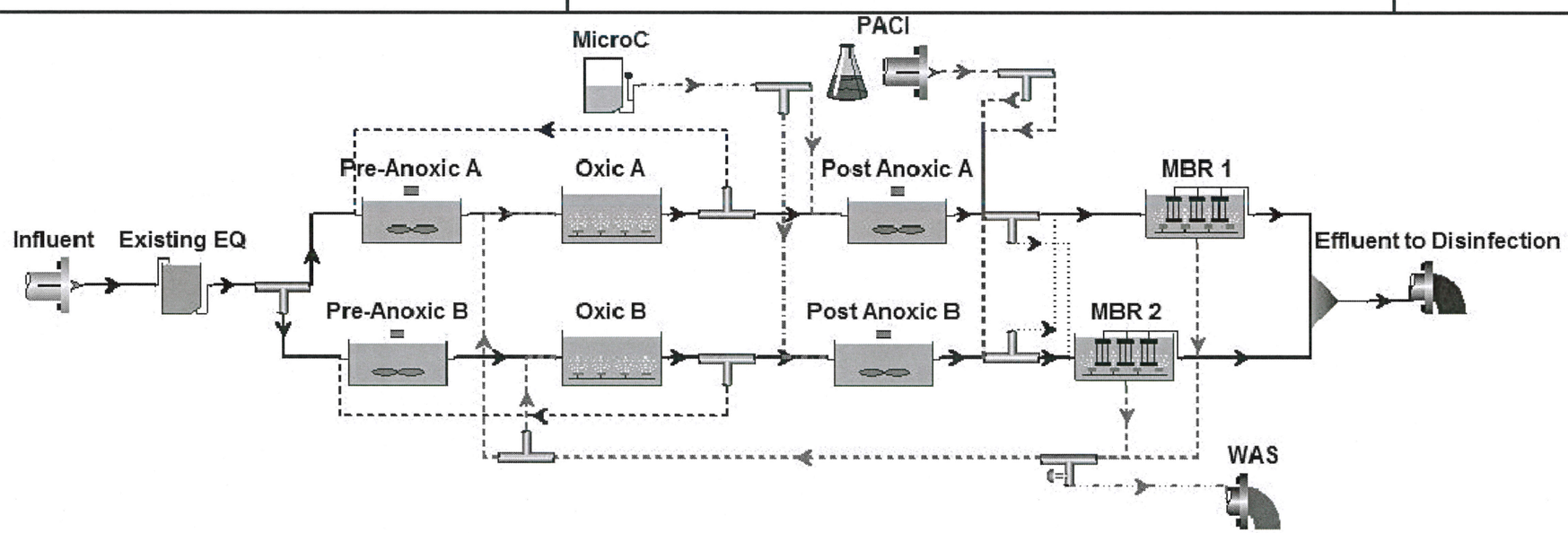

BIOWIN – PROCESS FLOW DIAGRAM

FEI ENGINEERS

VILLAGE OF TAOS SKI VALLEY
WASTEWATER TREATMENT PLANT EXPANSION
CONCEPT LAYOUTS AND BIOWIN PROCESS FLOW DIAGRAM

Z:\CADD DRAWINGS\FRACHETTI\VTSV-16-0220 – WWTP\Figures\2016-10-25 – LAYOUT OPTIONS\FIGURE 1 Kee Edit 11-29-16 LAST SAVED: 11/29/2016 12:51 PM LAST PLOTTED: 11/29/2016 12:52 PM BY: VENKAT

©COPYRIGHT FEI Engineers, Inc.